Project:

Fuel Retail Outlet

Location:

Dzongkhag: Chukha
(Chamkuna Lap)

Phuentsholing Thromde
PLOT ID: LPGT-225

Owner

State Trading Corporation of Bhutan Ltd

ARCHITECTURE DRAWINGS

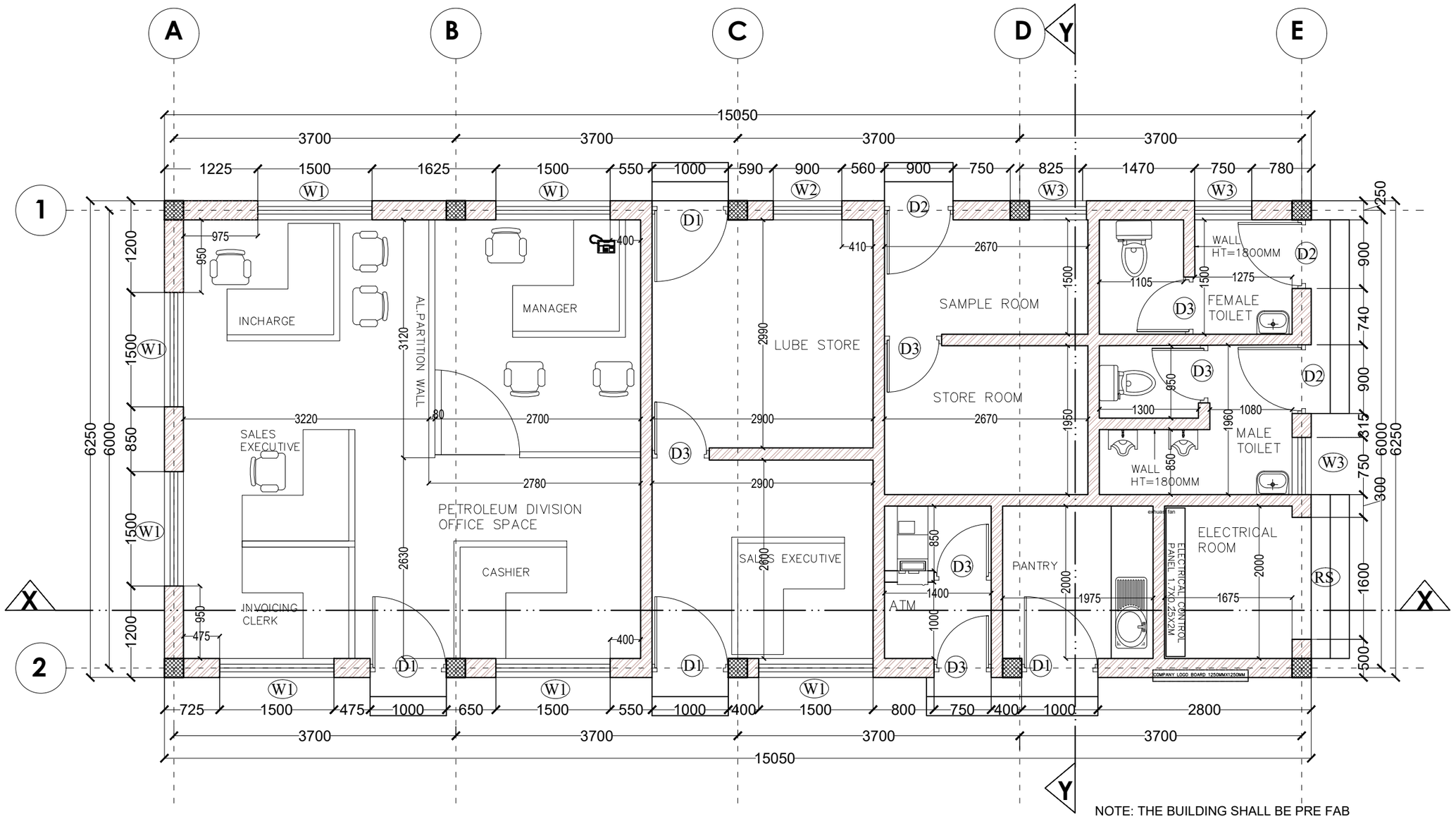

GROUND FLOOR PLAN

NOTE: THE BUILDING SHALL BE PRE FAB CONSIDERING THE SAME LAYOUT AND PLAN

PROJECT TITLE : Fuel Retail Outlet		LOCATION : CHAMKUNA LAP, PHUENTSHOLING		DATE: MARCH, 2021	SHEET NO AR- 02	**NOTE:** ALL DIMENSIONS ARE IN MILLIMETERS UNLESS SPECIFIED OTHERWISE ALL DIMENSIONS MEASURE UNFINISHED SURFACES UNLESS SPECIFIED OTHERWISE ALL DIMENSIONS ARE TO BE READ AND NOT SCALE OFF ANY DISCREPANCY IN DRAWING IS TO BE BROUGHT TO THE IMMEDIATE NOTICE OF THE ARCHITECT AND THE ENGINEER	..\..\Downloads\green-design-logo.png	www.greendesign.com.bt gdsbhutan@gmail.com +975 17631322/77845668 FLAT NO 8,GONGDZIN LAM ABOVE 8/11 CONVENIENT STORE NEXT TO THIMPHU THROMDE BUILDING THIMPHU:BHUTAN
DRAWING TITLE : **GROUND FLOOR PLAN**	SCALE : NTS	THRAM NO- -	PLOT NO- LGPT-225	OWNER: STCBL	DESIGN & DRAWN BY JIGME WANGMO Reg# BA-285(P)		

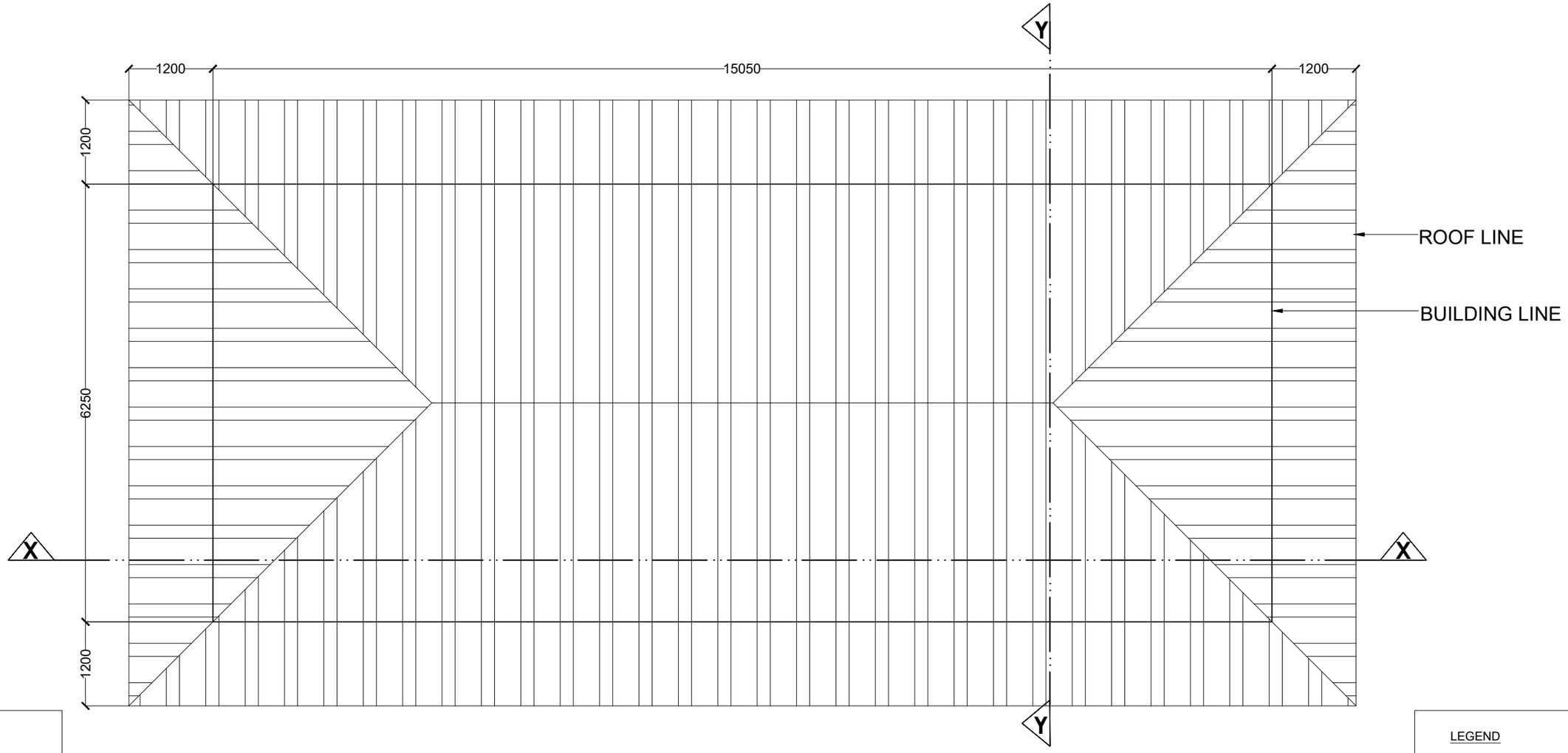

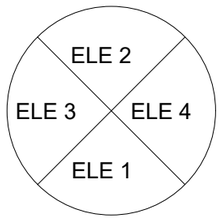

LEGEND

- BRICK WALL
- RCC
- PCC
- STONE SOLING

PROJECT TITLE : Fuel Retail Outlet		LOCATION : CHAMKUNA LAP, PHUENTSHOLING		DATE: MARCH, 2021	SHEET NO AR- 03	**NOTE:** ALL DIMENSIONS ARE IN MILLIMETERS UNLESS SPECIFIED OTHERWISE ALL DIMENSIONS MEASURE UNFINISHED SURFACES UNLESS SPECIFIED OTHERWISE ALL DIMENSIONS ARE TO BE READ AND NOT SCALE OFF ANY DISCREPANCY IN DRAWING IS TO BE BROUGHT TO THE IMMEDIATE NOTICE OF THE ARCHITECT AND THE ENGINEER	..\..\Downloads\green-design-logo.png LOGO.png	www.greendesign.com.bt gdsbhutan@gmail.com +975 17631322/77845668 FLAT NO 8,GONGDZIN LAM ABOVE 8/11 CONVENIENT STORE NEXT TO THIMPHU THROMDE BUILDING THIMPHU:BHUTAN
DRAWING TITLE : **ROOF PLAN**	SCALE : NTS	THRAM NO- -	PLOT NO- LGPT-225	OWNER: STCBL	DESIGN & DRAWN BY JIGME WANGMO Reg# BA-285(P)		

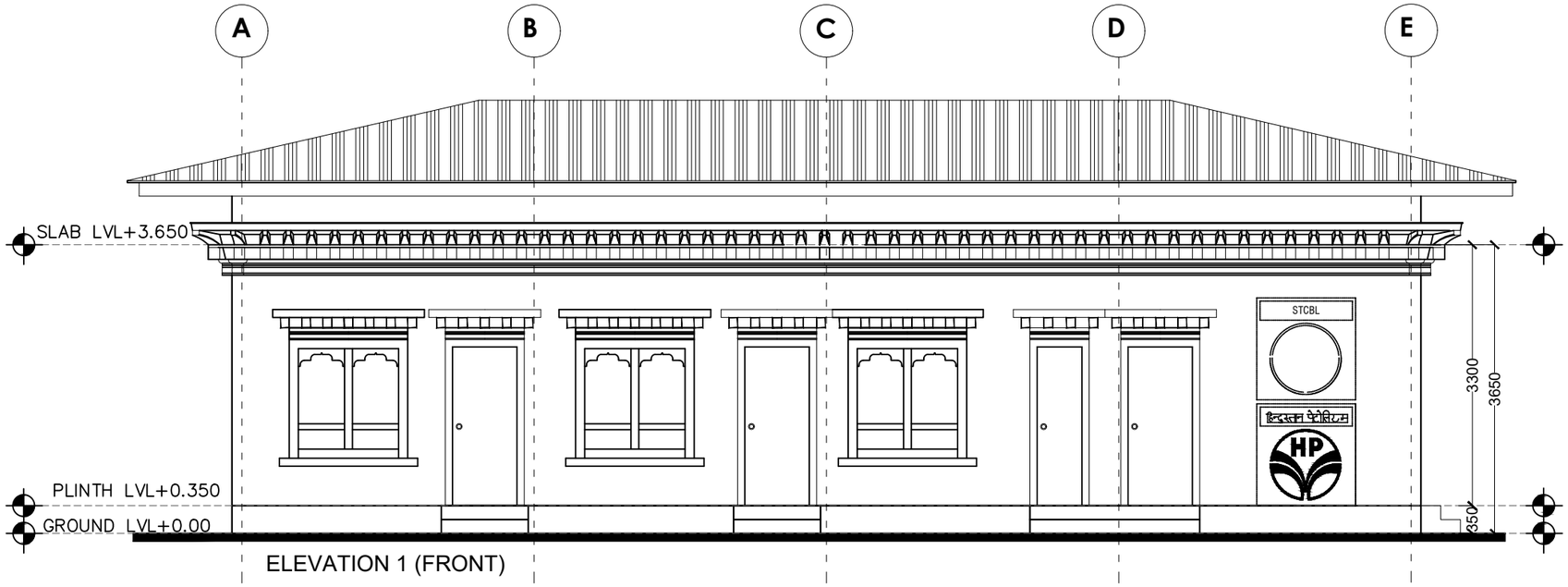

ELEVATION 1 (FRONT)

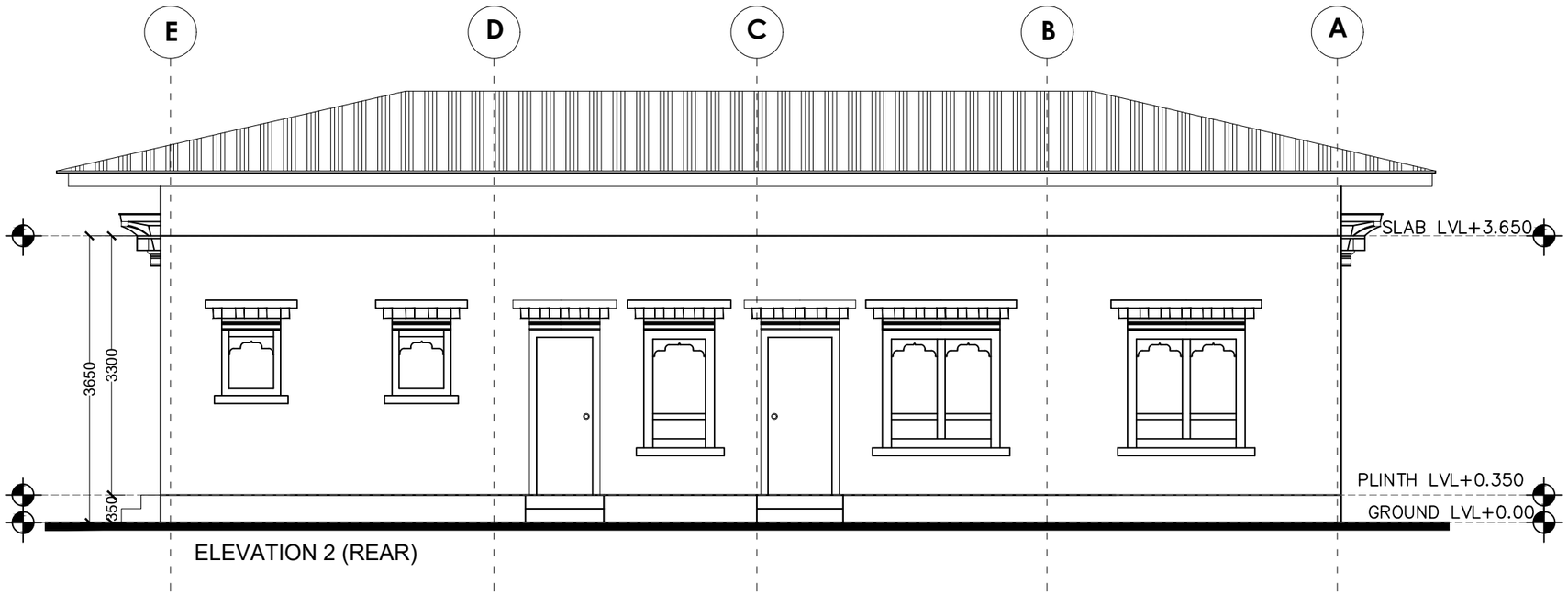

ELEVATION 2 (REAR)

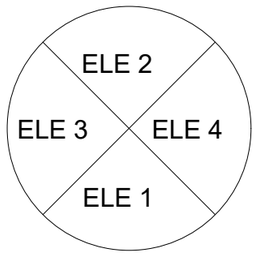

PROJECT TITLE : Fuel Retail Outlet		LOCATION : CHAMKUNA LAP, PHUENTSHOLING		DATE: MARCH, 2021	SHEET NO AR- 04	**NOTE:** ALL DIMENSIONS ARE IN MILLIMETERS UNLESS SPECIFIED OTHERWISE ALL DIMENSIONS MEASURE UNFINISHED SURFACES UNLESS SPECIFIED OTHERWISE ALL DIMENSIONS ARE TO BE READ AND NOT SCALE OFF ANY DISCREPANCY IN DRAWING IS TO BE BROUGHT TO THE IMMEDIATE NOTICE OF THE ARCHITECT AND THE ENGINEER	..\..\Downloads\green-design-logo.png	www.greendesign.com.bt gdsbhutan@gmail.com +975 17631322/77845668 FLAT NO 8,GONGDZIN LAM ABOVE 8/11 CONVENIENT STORE NEXT TO THIMPHU THROMDE BUILDING THIMPHU:BHUTAN
DRAWING TITLE : **ELEVATIONS**	SCALE : NTS	THRAM NO- -	PLOT NO- LGPT-225	OWNER: STCBL	DESIGN & DRAWN BY JIGME WANGMO Reg# BA-285(P)		

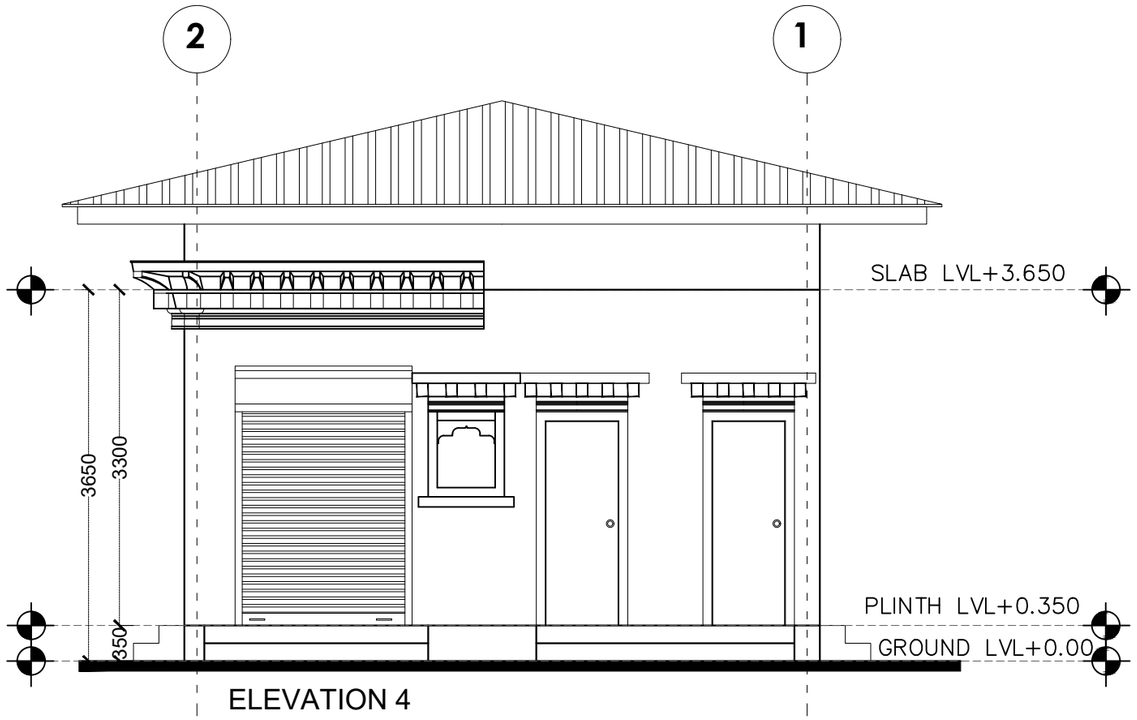

ELEVATION 4

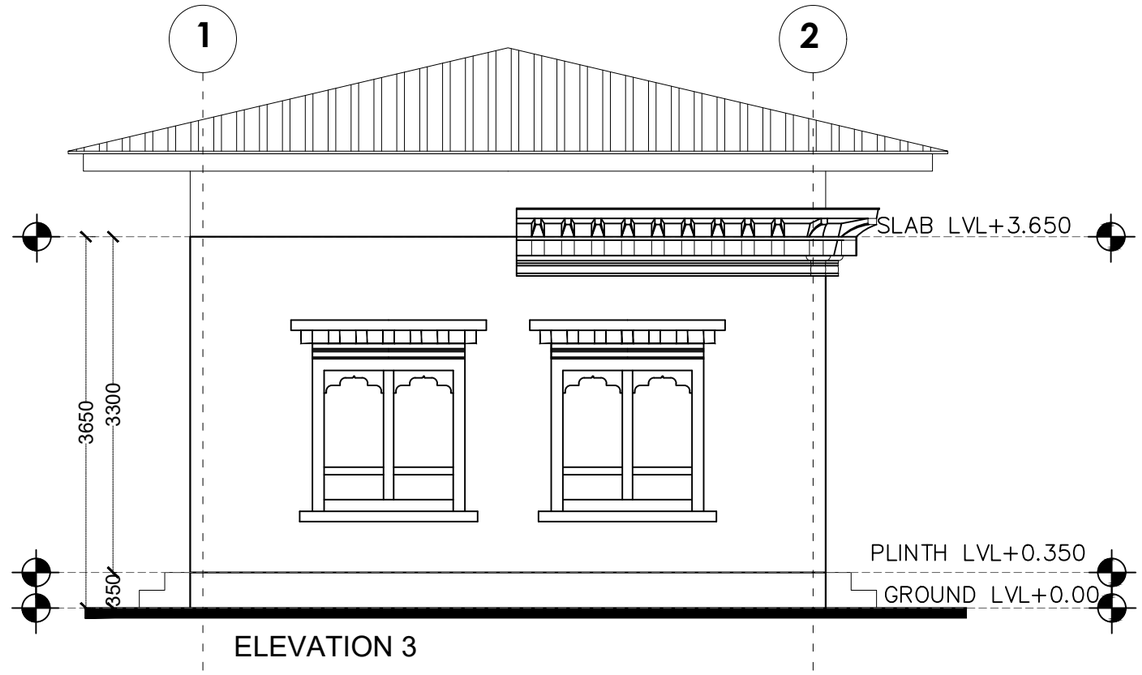

ELEVATION 3

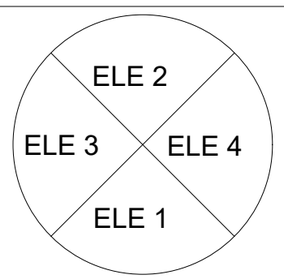

PROJECT TITLE : Fuel Retail Outlet		LOCATION : CHAMKUNA LAP, PHUENTSHOLING		DATE: MARCH, 2021	SHEET NO AR- 05	**NOTE:** ALL DIMENSIONS ARE IN MILLIMETERS UNLESS SPECIFIED OTHERWISE ALL DIMENSIONS MEASURE UNFINISHED SURFACES UNLESS SPECIFIED OTHERWISE ALL DIMENSIONS ARE TO BE READ AND NOT SCALE OFF ANY DISCREPANCY IN DRAWING IS TO BE BROUGHT TO THE IMMEDIATE NOTICE OF THE ARCHITECT AND THE ENGINEER	..\..\Downloads\green-design-logo.png	www.greendesign.com.bt gdsbhutan@gmail.com +975 17631322/77845668 FLAT NO 8,GONGDZIN LAM ABOVE 8/11 CONVENIENT STORE NEXT TO THIMPHU THROMDE BUILDING THIMPHU:BHUTAN
DRAWING TITLE : **ELEVATIONS**	SCALE : NTS	THRAM NO- -	PLOT NO- LGPT-225	OWNER: STCBL	DESIGN & DRAWN BY JIGME WANGMO Reg# BA-285(P)		

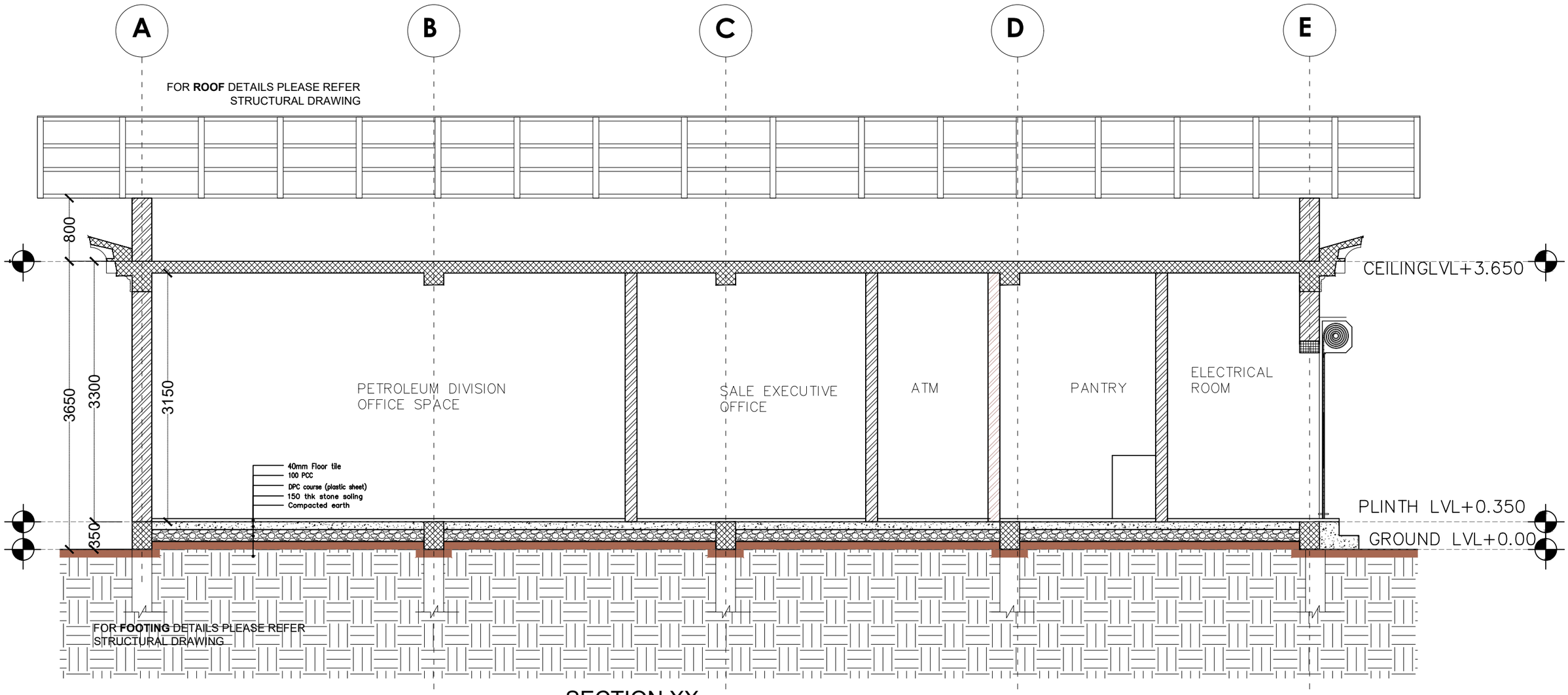

SECTION XX

PROJECT TITLE : Fuel Retail Outlet		LOCATION : CHAMKUNA LAP, PHUENTSHOLING		DATE: MARCH, 2021	SHEET NO AR- 06	**NOTE:** ALL DIMENSIONS ARE IN MILLIMETERS UNLESS SPECIFIED OTHERWISE ALL DIMENSIONS MEASURE UNFINISHED SURFACES UNLESS SPECIFIED OTHERWISE ALL DIMENSIONS ARE TO BE READ AND NOT SCALE OFF ANY DISCREPANCY IN DRAWING IS TO BE BROUGHT TO THE IMMEDIATE NOTICE OF THE ARCHITECT AND THE ENGINEER	..\..\Downloads\green-design-logo.png	www.greendesign.com.bt gdsbhutan@gmail.com +975 17631322/77845668 FLAT NO 8,GONGDZIN LAM ABOVE 8/11 CONVENIENT STORE NEXT TO THIMPHU THROMDE BUILDING THIMPHU:BHUTAN
DRAWING TITLE : **SECTIONS**	SCALE : NTS	THRAM NO- -	PLOT NO- LGPT-225	OWNER: STCBL	DESIGN & DRAWN BY JIGME WANGMO Reg# BA-285(P)		

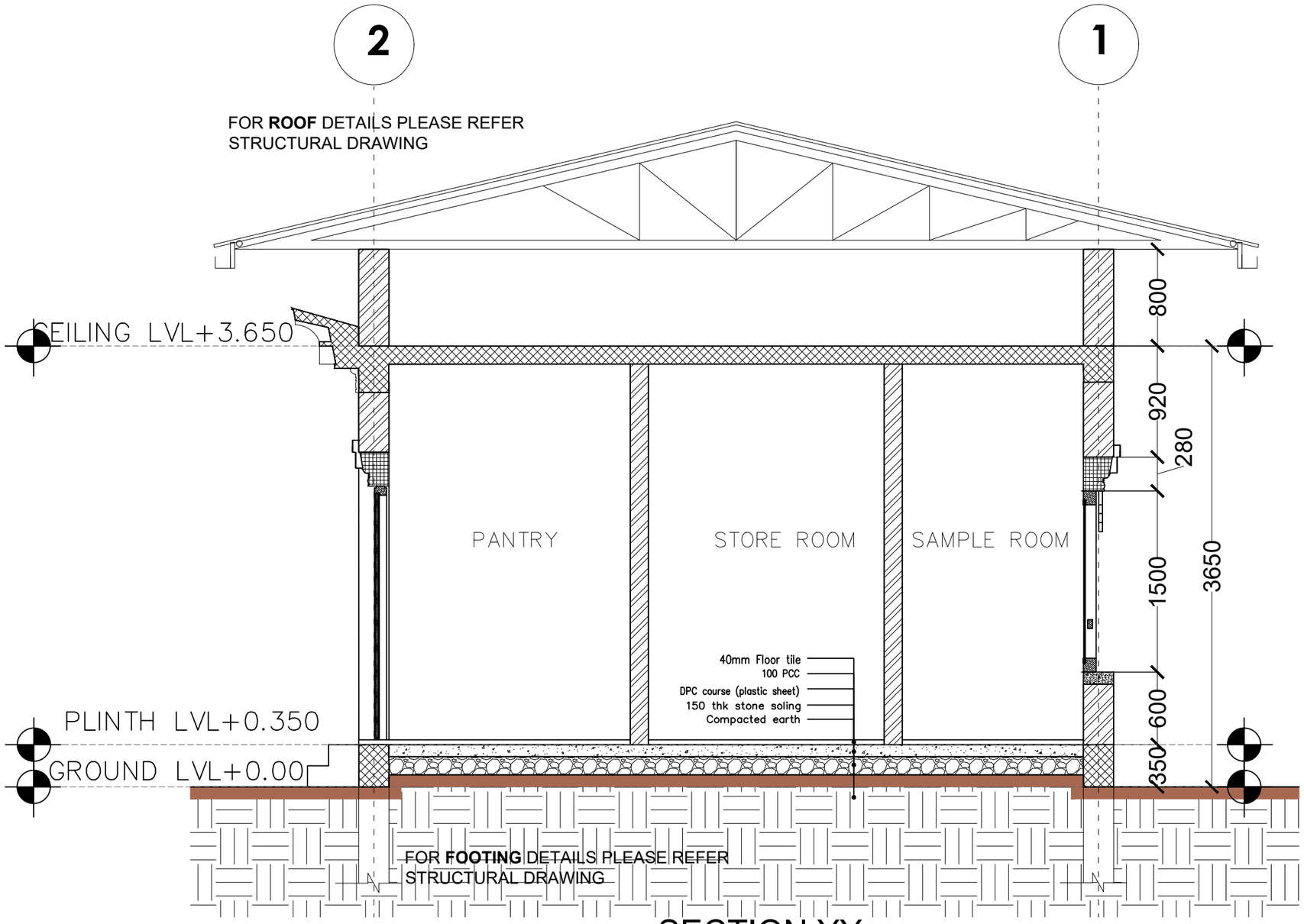

SECTION YY

PROJECT TITLE : Fuel Retail Outlet		LOCATION : CHAMKUNA LAP, PHUENTSHOLING		DATE: MARCH, 2021	SHEET NO AR- 07	NOTE: ALL DIMENSIONS ARE IN MILLIMETERS UNLESS SPECIFIED OTHERWISE ALL DIMENSIONS MEASURE UNFINISHED SURFACES UNLESS SPECIFIED OTHERWISE ALL DIMENSIONS ARE TO BE READ AND NOT SCALE OFF ANY DISCREPANCY IN DRAWING IS TO BE BROUGHT TO THE IMMEDIATE NOTICE OF THE ARCHITECT AND THE ENGINEER	..\..\Downloads\green-design-logo.png	www.greendesign.com.bt gdsbhutan@gmail.com +975 17631322/77845668 FLAT NO 8,GONGDZIN LAM ABOVE 8/11 CONVENIENT STORE NEXT TO THIMPHU THROMDE BUILDING THIMPHU:BHUTAN
DRAWING TITLE : **SECTIONS**	SCALE : NTS	THRAM NO- -	PLOT NO- LGPT-225	OWNER: STCBL	DESIGN & DRAWN BY JIGME WANGMO Reg# BA-285(P)		

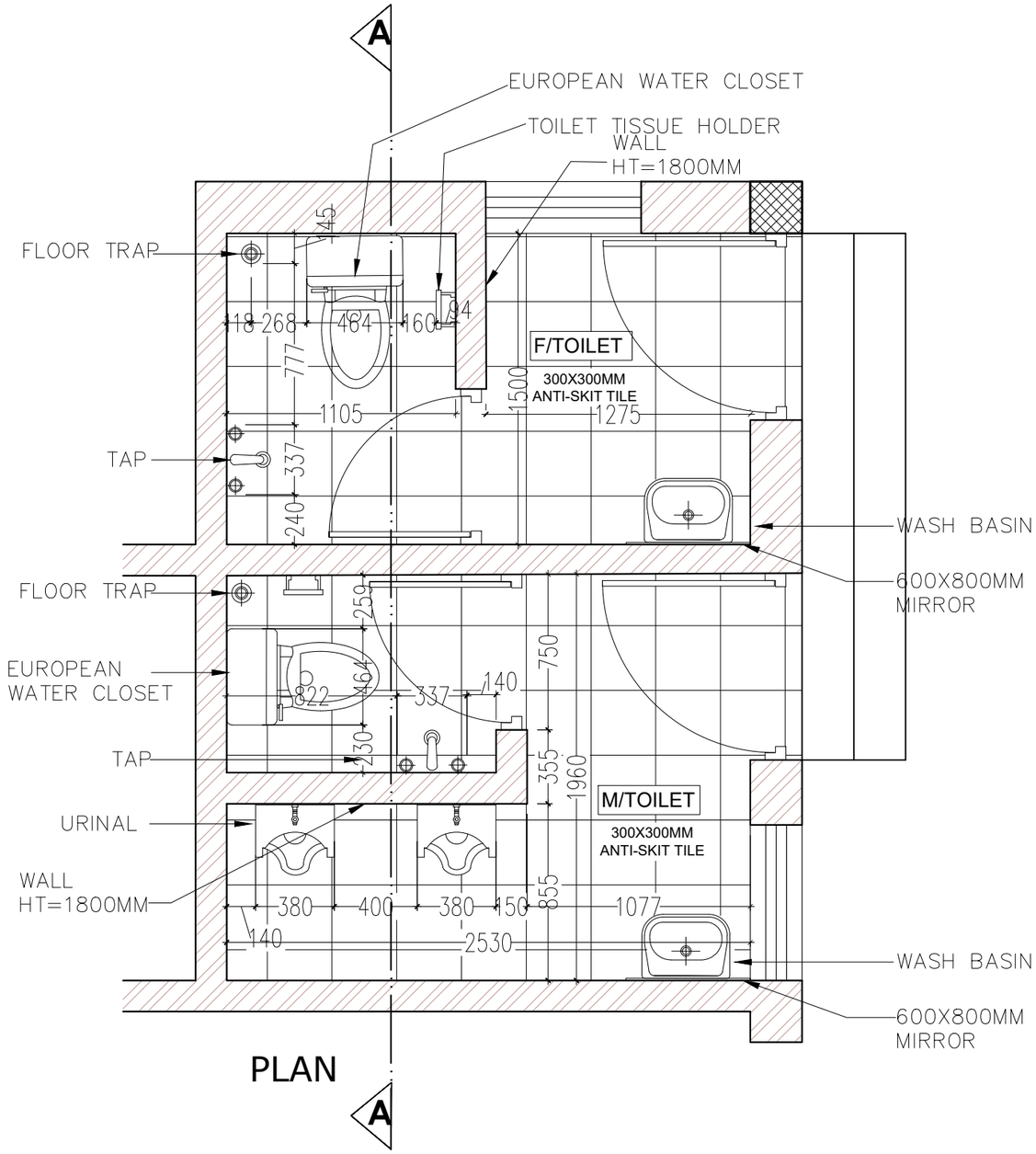

PLAN

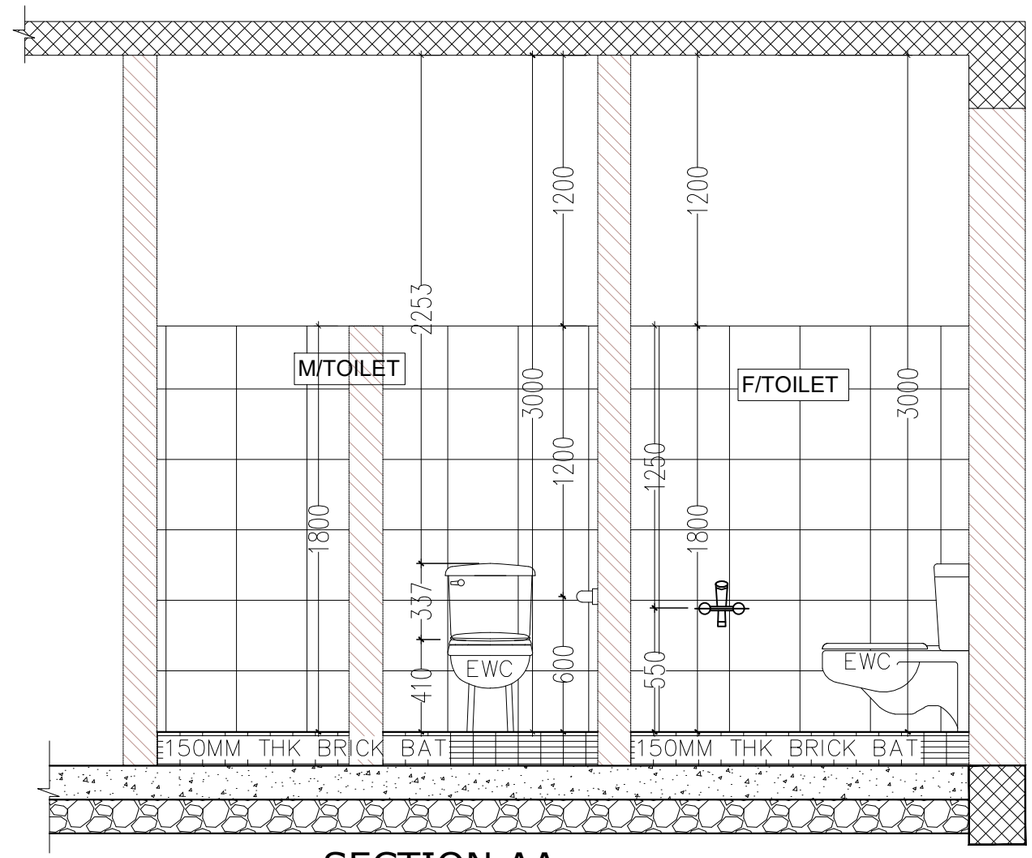

SECTION AA

PROJECT TITLE : Fuel Retail Outlet		LOCATION : CHAMKUNA LAP, PHUENTSHOLING		DATE: MARCH, 2021	SHEET NO AR- 08	**NOTE:** ALL DIMENSIONS ARE IN MILLIMETERS UNLESS SPECIFIED OTHERWISE ALL DIMENSIONS MEASURE UNFINISHED SURFACES UNLESS SPECIFIED OTHERWISE ALL DIMENSIONS ARE TO BE READ AND NOT SCALE OFF ANY DISCREPANCY IN DRAWING IS TO BE BROUGHT TO THE IMMEDIATE NOTICE OF THE ARCHITECT AND THE ENGINEER	..\..\Downloads\green-design-logo.png	www.greendesign.com.bt gdsbhutan@gmail.com +975 17631322/77845668 FLAT NO 8,GONGDZIN LAM ABOVE 8/11 CONVENIENT STORE NEXT TO THIMPHU THROMDE BUILDING THIMPHU:BHUTAN
DRAWING TITLE : **TOILET DETAILS**	SCALE : NTS	THRAM NO- -	PLOT NO- LGPT-225	OWNER: STCBL	DESIGN & DRAWN BY JIGME WANGMO Reg# BA-285(P)		

WINDOW SCHEDULE

SL NO.	ITEM	DIMENSIONS(MM)		SILL	NO.	REMARKS
		WIDTH	HEIGHT			
01.	W1	1500	1500	600	07	GLASS WINDOW
02.	W2	900	1500	600	01	GLASS WINDOW
03.	W3	750	500	1265	03	GLASS WINDOW

DOOR SCHEDULE

SL NO.	ITEM	DIMENSIONS(MM)		SILL	NO.	REMARKS
		WIDTH	HEIGHT			
01.	D1	1000	2100	0	04	FLUSH DOOR
02.	D2	900	2100	0	03	FLUSH DOOR
03.	D3	750	2100	0	06	FLUSH DOOR
04.	RS	1600	2100	0	1	ROLLER SHUTTER

PROJECT TITLE : Fuel Retail Outlet		LOCATION : CHAMKUNA LAP, PHUENTSHOLING		DATE: MARCH, 2021	SHEET NO AR- 09	**NOTE:** ALL DIMENSIONS ARE IN MILLIMETERS UNLESS SPECIFIED OTHERWISE ALL DIMENSIONS MEASURE UNFINISHED SURFACES UNLESS SPECIFIED OTHERWISE ALL DIMENSIONS ARE TO BE READ AND NOT SCALE OFF ANY DISCREPANCY IN DRAWING IS TO BE BROUGHT TO THE IMMEDIATE NOTICE OF THE ARCHITECT AND THE ENGINEER	..\..\Downloads\green-design-logo.png LOGO.png	www.greendesign.com.bt gdsbhutan@gmail.com +975 17631322/77845668 FLAT NO 8,GONGDZIN LAM ABOVE 8/11 CONVENIENT STORE NEXT TO THIMPHU THROMDE BUILDING THIMPHU:BHUTAN
DRAWING TITLE : **WINDOW & DOOR SCHEDULE**	SCALE : NTS	THRAM NO- -	PLOT NO- LGPT-225	OWNER: STCBL	DESIGN & DRAWN BY JIGME WANGMO Reg# BA-285(P)		

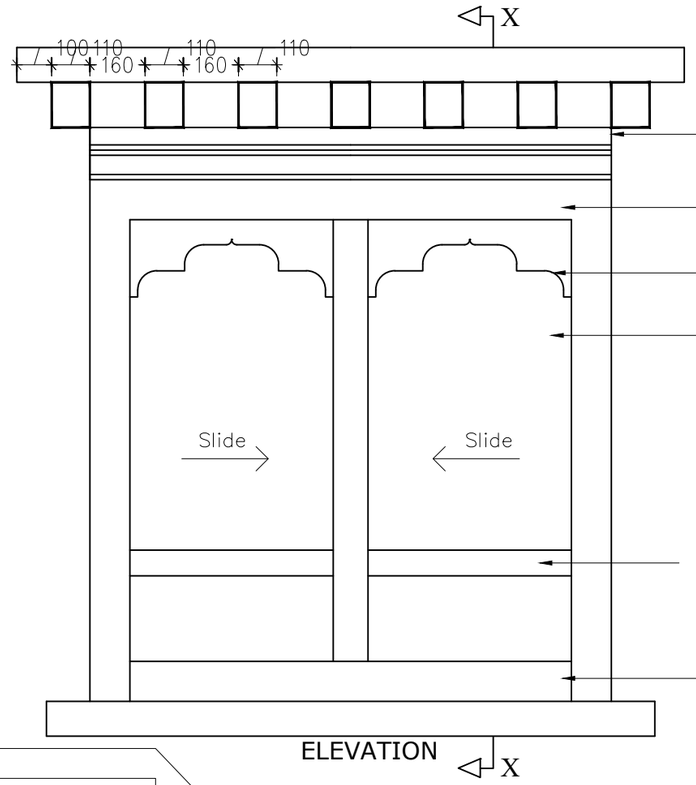

ELEVATION

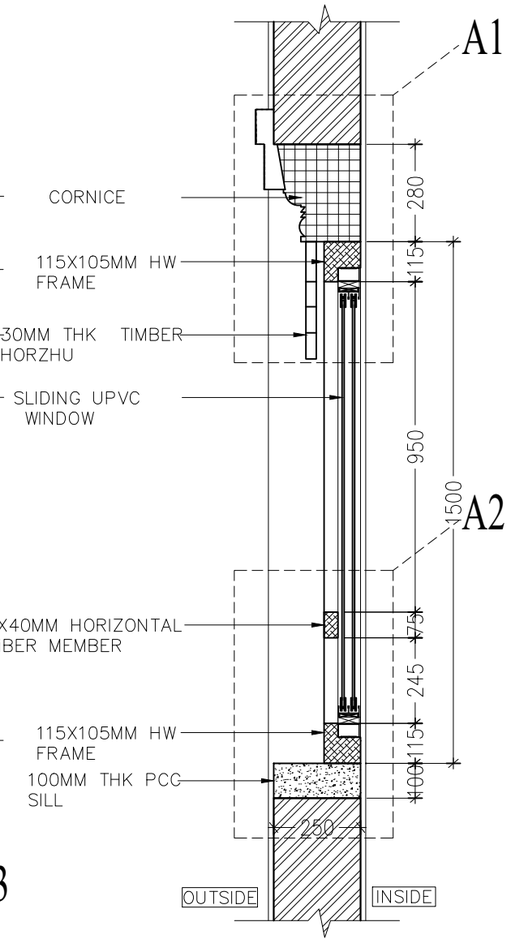

SECTION XX

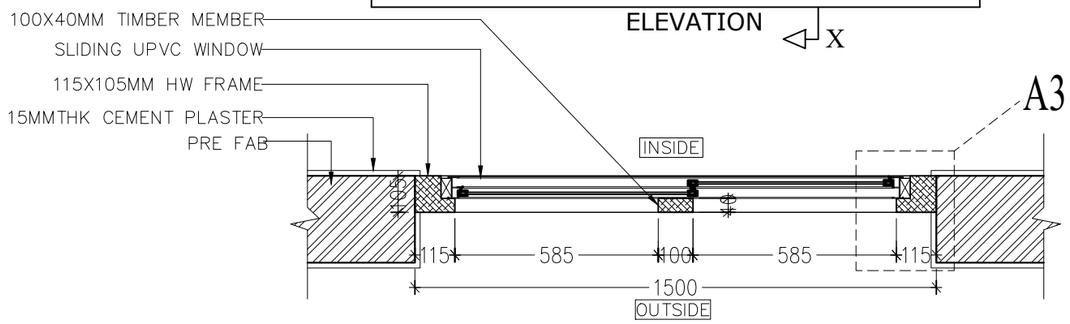

PLAN

W1

PROJECT TITLE : Fuel Retail Outlet		LOCATION : CHAMKUNA LAP, PHUENTSHOLING		DATE: MARCH, 2021	SHEET NO AR- 10	**NOTE:** ALL DIMENSIONS ARE IN MILLIMETERS UNLESS SPECIFIED OTHERWISE ALL DIMENSIONS MEASURE UNFINISHED SURFACES UNLESS SPECIFIED OTHERWISE ALL DIMENSIONS ARE TO BE READ AND NOT SCALE OFF ANY DISCREPANCY IN DRAWING IS TO BE BROUGHT TO THE IMMEDIATE NOTICE OF THE ARCHITECT AND THE ENGINEER	..\..\Downloads\green-design-logo.png LOGO.png	www.greendesign.com.bt gdsbhutan@gmail.com +975 17631322/77845668 FLAT NO 8,GONGDZIN LAM ABOVE 8/11 CONVENIENT STORE NEXT TO THIMPHU THROMDE BUILDING THIMPHU:BHUTAN
DRAWING TITLE : **WINDOW DETAILS**	SCALE : NTS	THRAM NO- -	PLOT NO- LGPT-225	OWNER: STCBL	DESIGN & DRAWN BY JIGME WANGMO Reg# BA-285(P)		

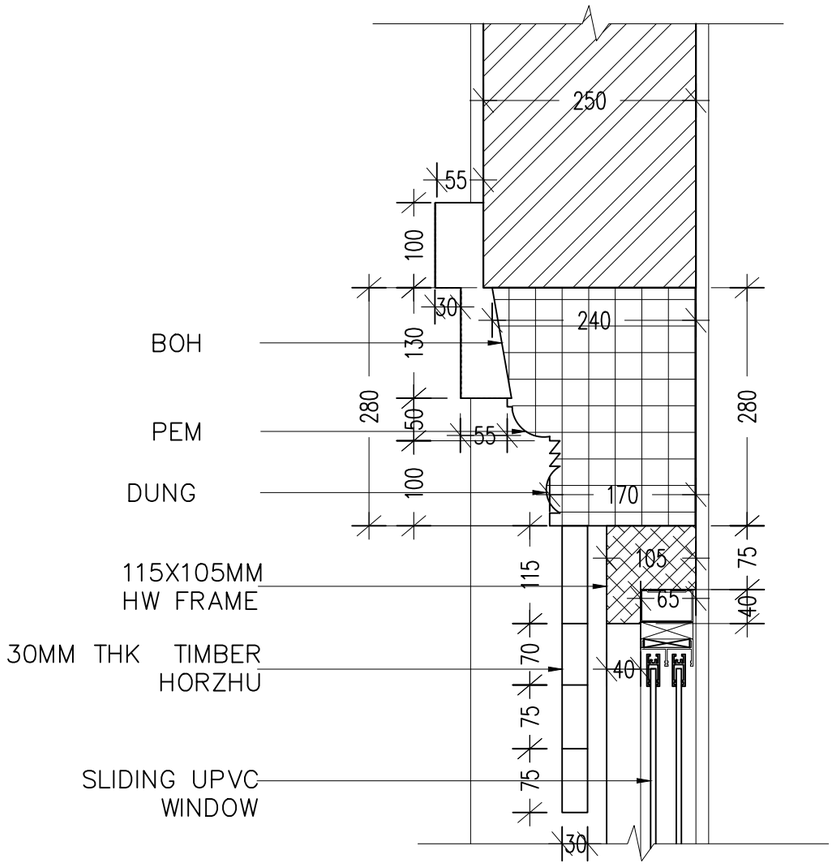

DETAIL A1

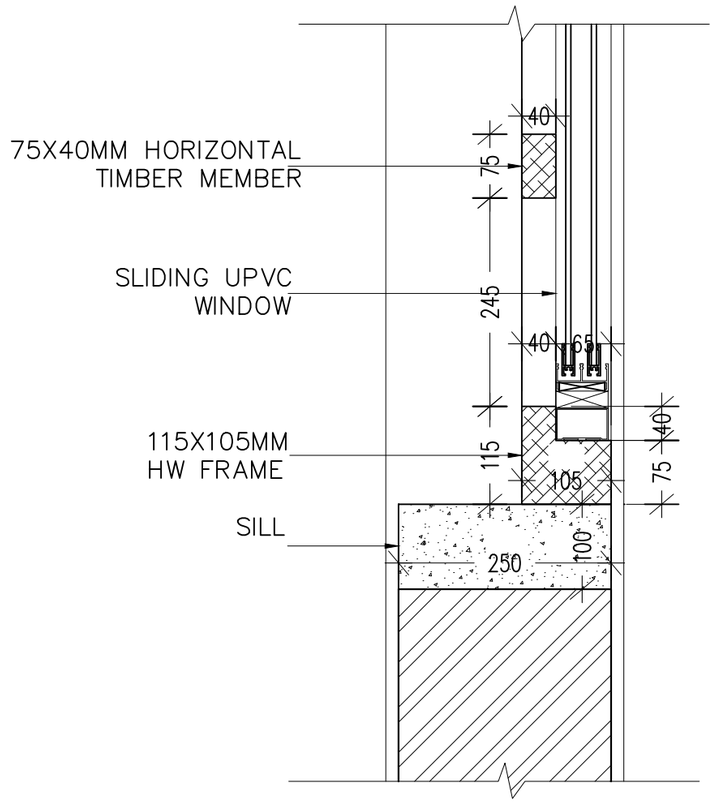

DETAIL A2

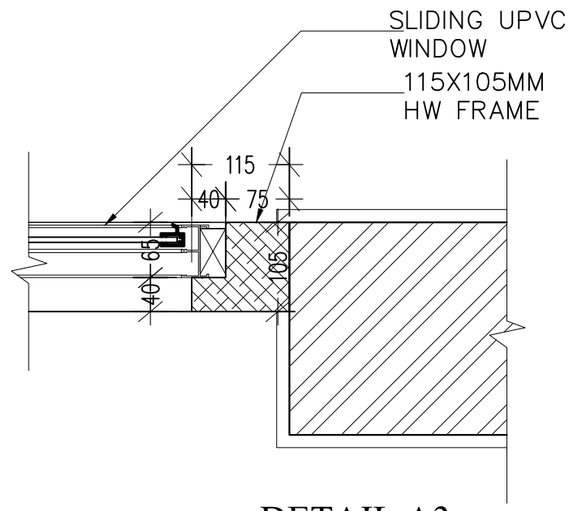

DETAIL A3

PROJECT TITLE : Fuel Retail Outlet		LOCATION : CHAMKUNA LAP, PHUENTSHOLING		DATE: MARCH, 2021	SHEET NO AR- 11	**NOTE:** ALL DIMENSIONS ARE IN MILLIMETERS UNLESS SPECIFIED OTHERWISE ALL DIMENSIONS MEASURE UNFINISHED SURFACES UNLESS SPECIFIED OTHERWISE ALL DIMENSIONS ARE TO BE READ AND NOT SCALE OFF ANY DISCREPANCY IN DRAWING IS TO BE BROUGHT TO THE IMMEDIATE NOTICE OF THE ARCHITECT AND THE ENGINEER		www.greendesign.com.bt gdsbhutan@gmail.com +975 17631322/77845668 FLAT NO 8,GONGDZIN LAM ABOVE 8/11 CONVENIENT STORE NEXT TO THIMPHU THROMDE BUILDING THIMPHU::BHUTAN
DRAWING TITLE : **WINDOW DETAILS**	SCALE : NTS	THRAM NO- -	PLOT NO- LGPT-225	OWNER: STCBL	DESIGN & DRAWN BY JIGME WANGMO Reg# BA-285(P)		..\..\Downloads\green-design-logo.png	

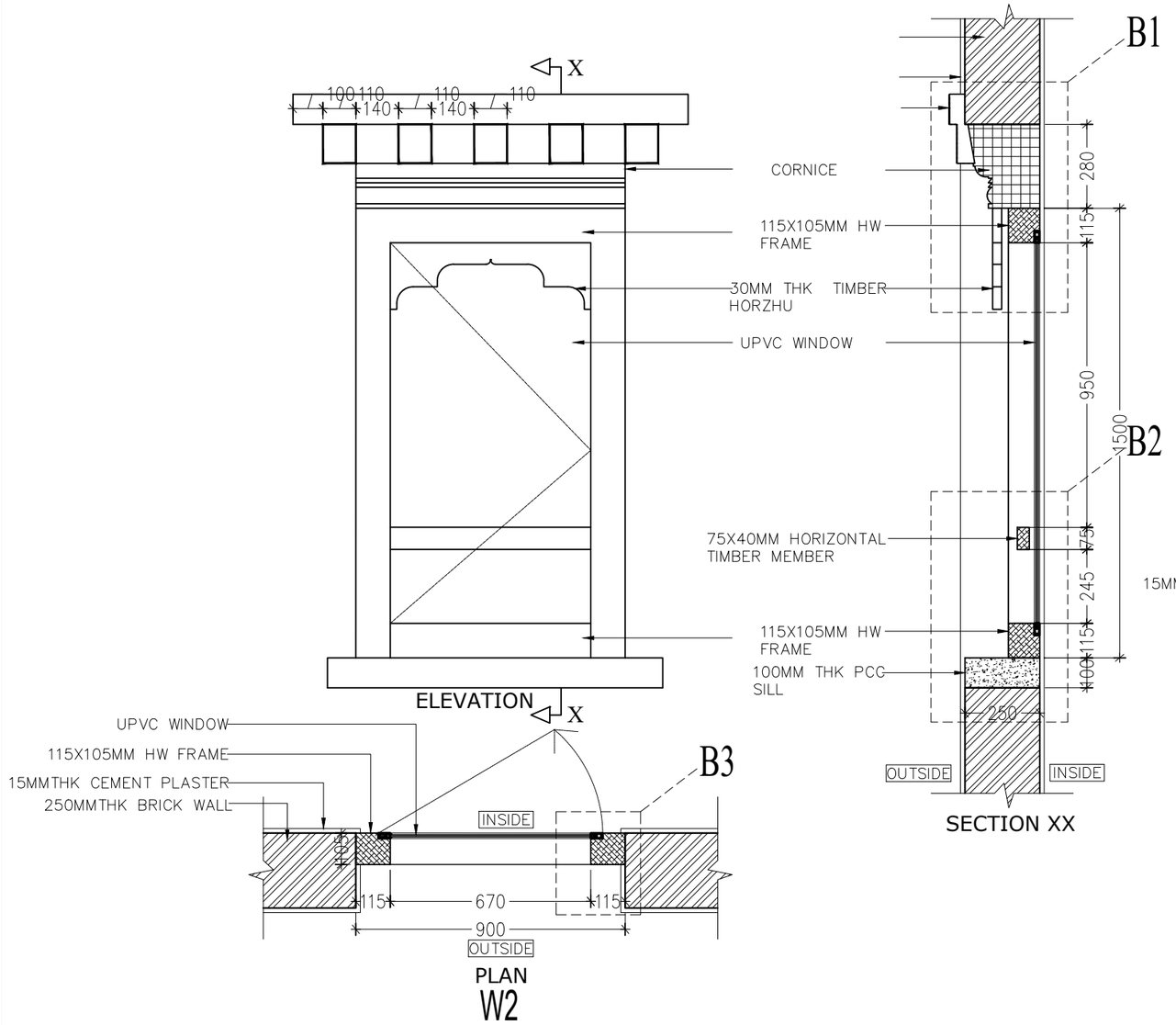

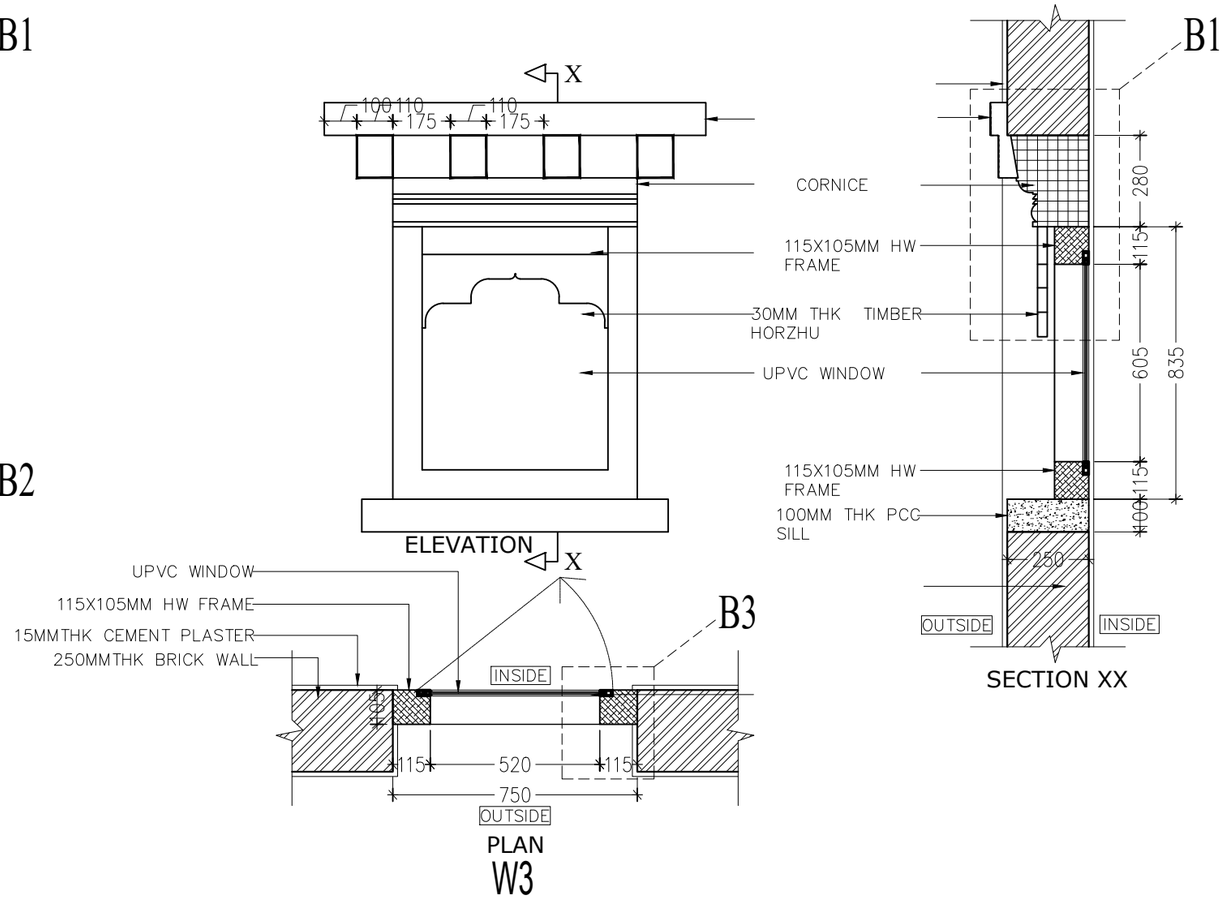

PROJECT TITLE : Fuel Retail Outlet		LOCATION : CHAMKUNA LAP, PHUENTSHOLING		DATE: MARCH, 2021	SHEET NO AR- 12	**NOTE:** ALL DIMENSIONS ARE IN MILLIMETERS UNLESS SPECIFIED OTHERWISE ALL DIMENSIONS MEASURE UNFINISHED SURFACES UNLESS SPECIFIED OTHERWISE ALL DIMENSIONS ARE TO BE READ AND NOT SCALE OFF ANY DISCREPANCY IN DRAWING IS TO BE BROUGHT TO THE IMMEDIATE NOTICE OF THE ARCHITECT AND THE ENGINEER	..\..\Downloads\green-design-logo.png	www.greendesign.com.bt gdsbhutan@gmail.com +975 17631322/77845668 FLAT NO 8,GONGDZIN LAM ABOVE 8/11 CONVENIENT STORE NEXT TO THIMPHU THROMDE BUILDING THIMPHU:BHUTAN
DRAWING TITLE : **WINDOW DETAILS**	SCALE : NTS	THRAM NO- -	PLOT NO- LGPT-225	OWNER: STCBL	DESIGN & DRAWN BY JIGME WANGMO Reg# BA-285(P)		

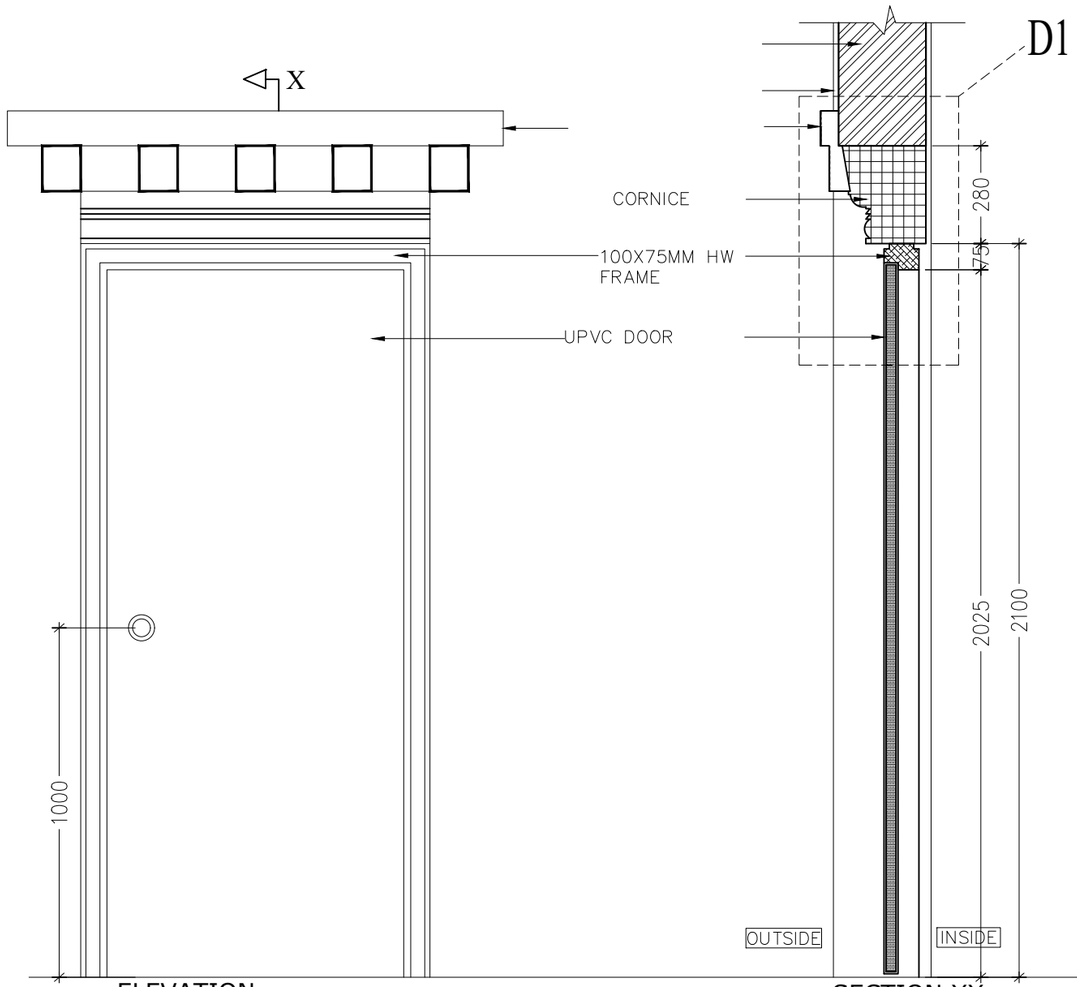

ELEVATION

SECTION XX

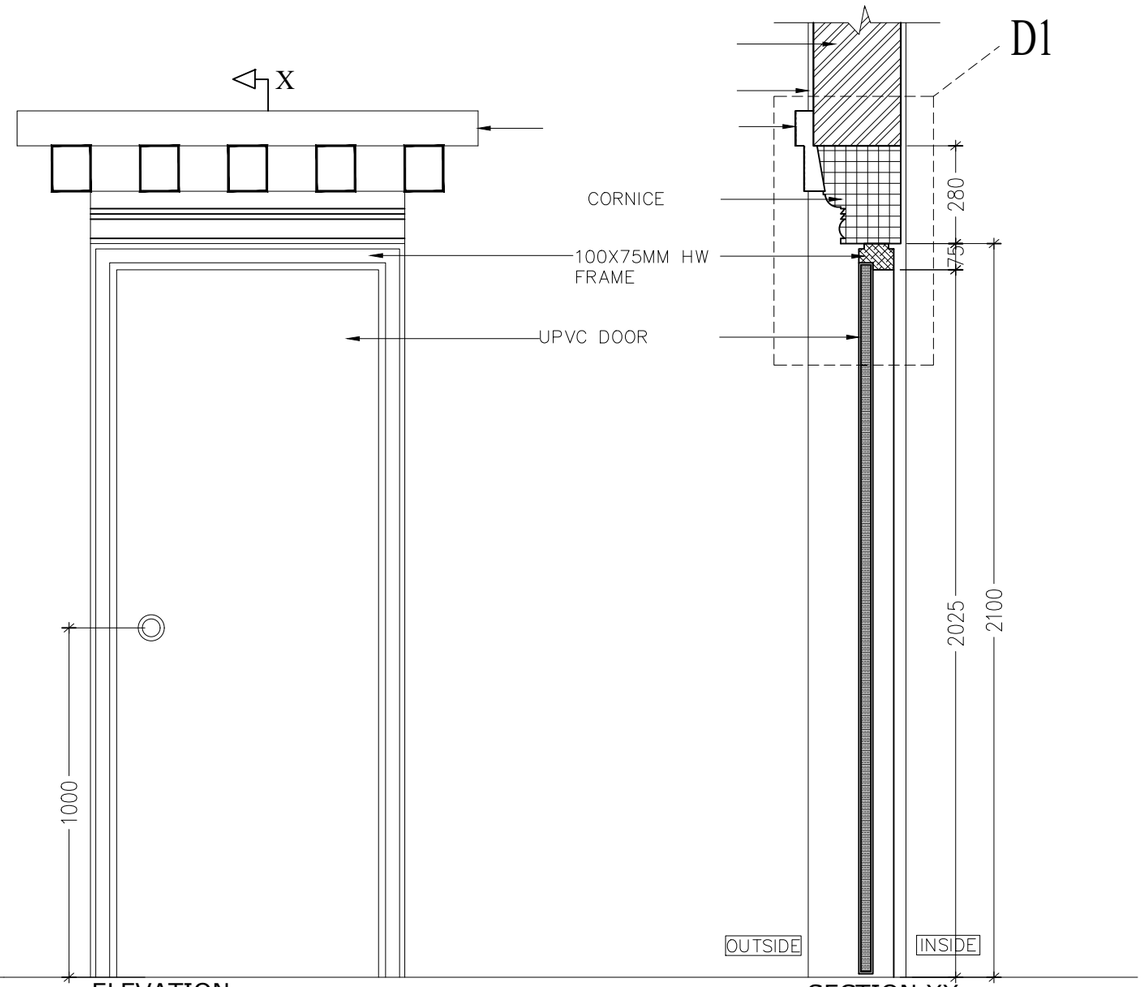

ELEVATION

SECTION XX

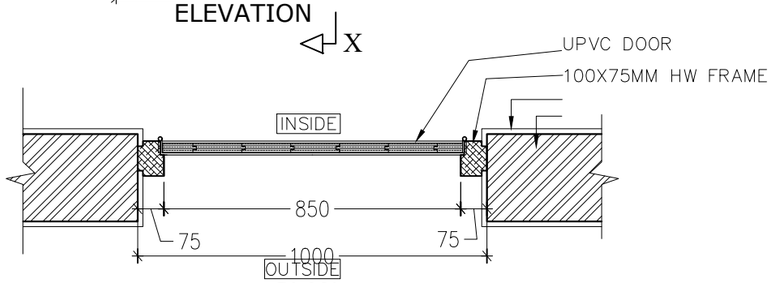

PLAN

D1

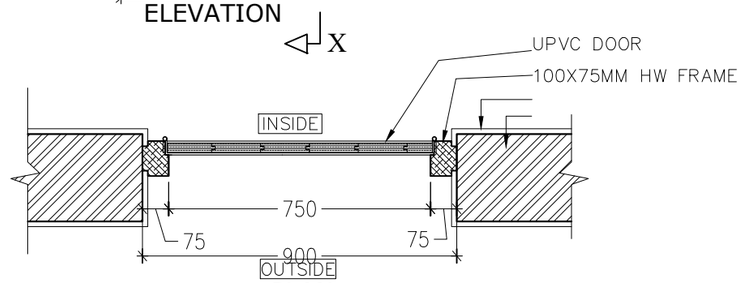

PLAN

D2

PROJECT TITLE : Fuel Retail Outlet		LOCATION : CHAMKUNA LAP, PHUENTSHOLING		DATE: MARCH, 2021	SHEET NO AR- 14	**NOTE:** ALL DIMENSIONS ARE IN MILLIMETERS UNLESS SPECIFIED OTHERWISE ALL DIMENSIONS MEASURE UNFINISHED SURFACES UNLESS SPECIFIED OTHERWISE ALL DIMENSIONS ARE TO BE READ AND NOT SCALE OFF ANY DISCREPANCY IN DRAWING IS TO BE BROUGHT TO THE IMMEDIATE NOTICE OF THE ARCHITECT AND THE ENGINEER	..\..\Downloads\green-design-logo.jpg	www.greendesign.com.bt gdsbhutan@gmail.com +975 17631322/77845668 FLAT NO 8,GONGDZIN LAM ABOVE 8/11 CONVENIENT STORE NEXT TO THIMPHU THROMDE BUILDING THIMPHU:BHUTAN
DRAWING TITLE : **DOOR DETAILS**		SCALE : NTS	THRAM NO- - / PLOT NO- LGPT-225	OWNER: STCBL	DESIGN & DRAWN BY JIGME WANGMO Reg# BA-285(P)		

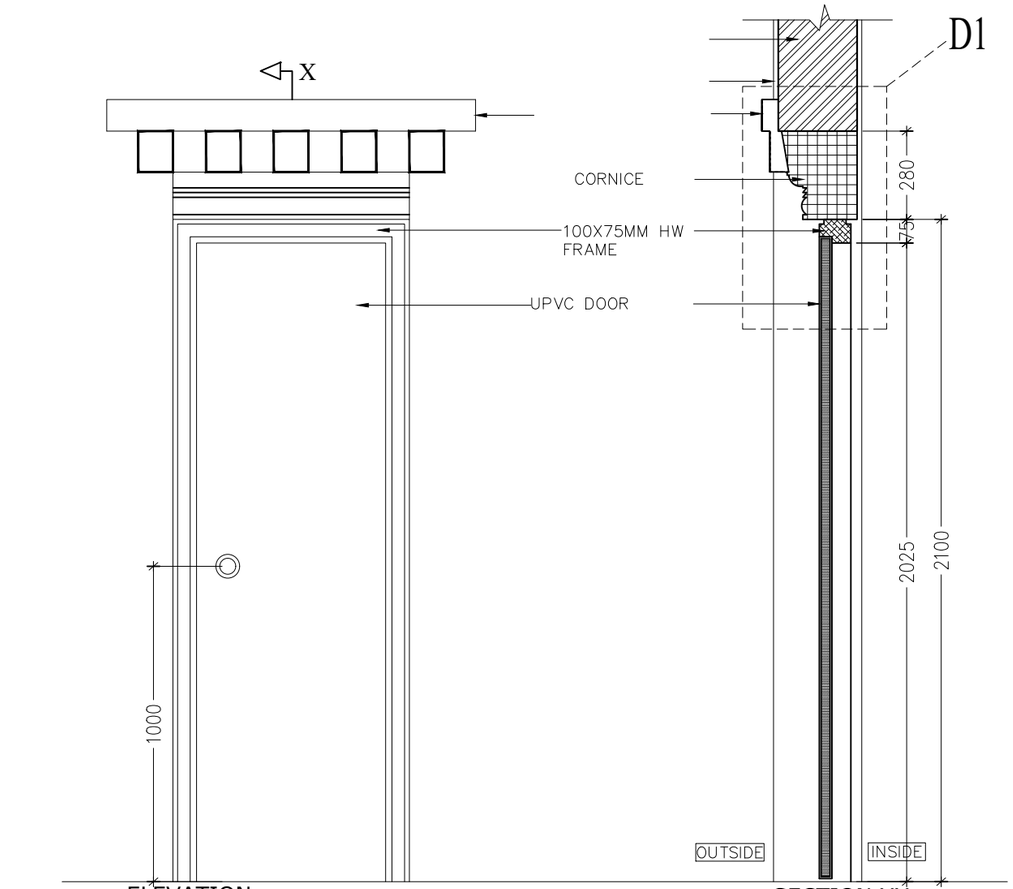

ELEVATION

SECTION XX

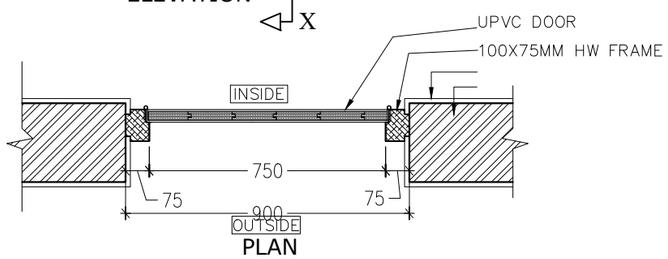

PLAN

D3

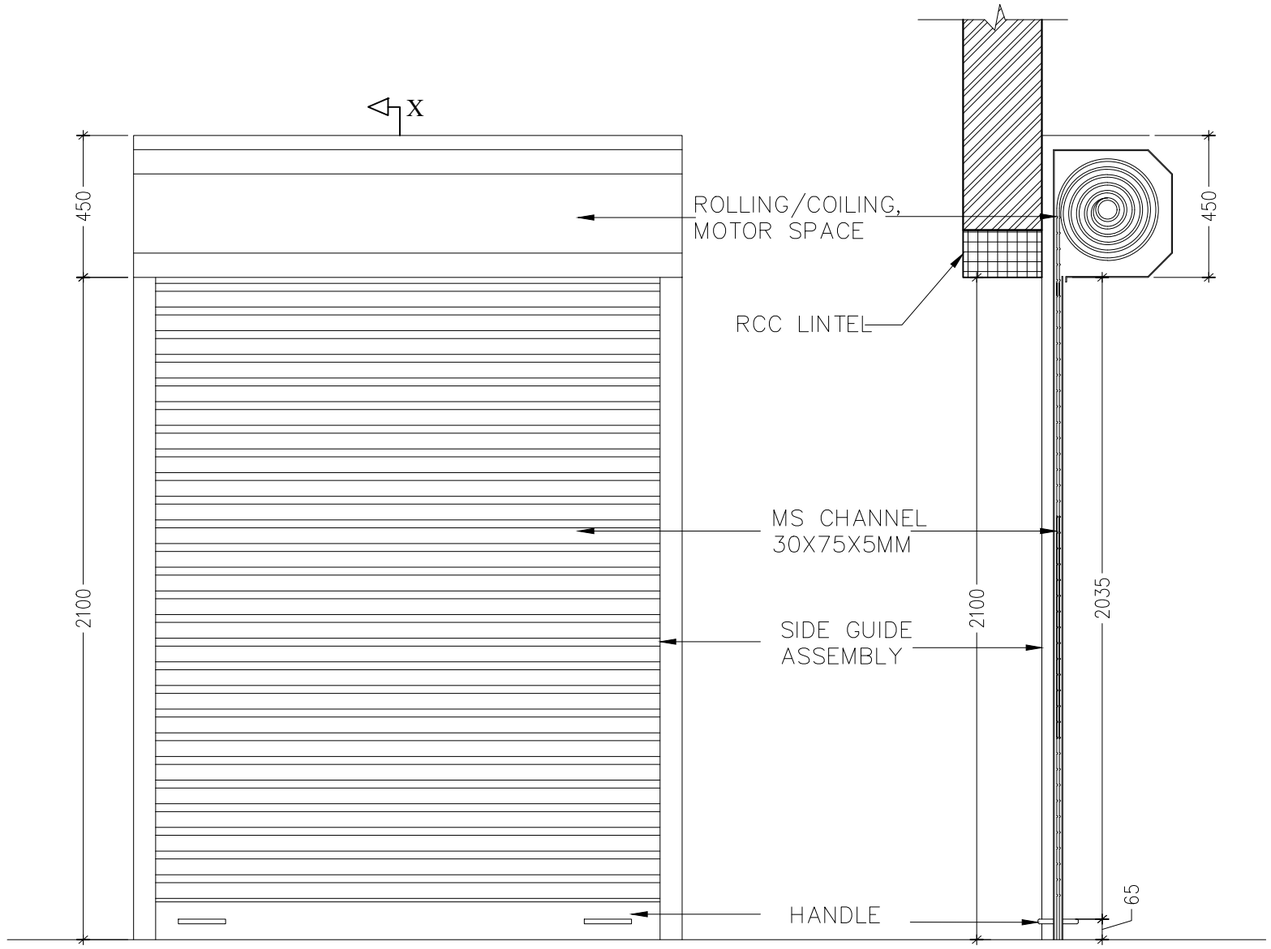

ELEVATION

SECTION XX

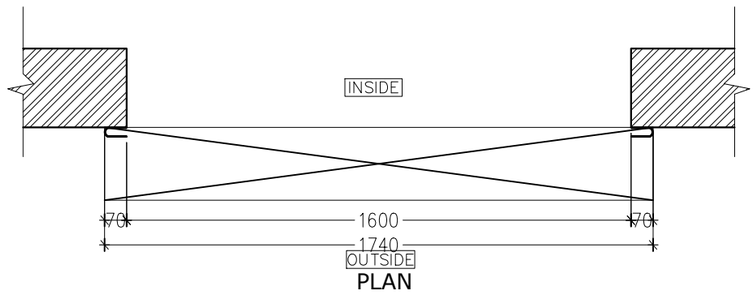

PLAN

RS

PROJECT TITLE : Fuel Retail Outlet		LOCATION : CHAMKUNA LAP, PHUENTSHOLING		DATE: MARCH, 2021	SHEET NO AR- 15	**NOTE:** ALL DIMENSIONS ARE IN MILLIMETERS UNLESS SPECIFIED OTHERWISE ALL DIMENSIONS MEASURE UNFINISHED SURFACES UNLESS SPECIFIED OTHERWISE ALL DIMENSIONS ARE TO BE READ AND NOT SCALE OFF ANY DISCREPANCY IN DRAWING IS TO BE BROUGHT TO THE IMMEDIATE NOTICE OF THE ARCHITECT AND THE ENGINEER	..\..\Downloads\green-design-logo.png	www.greendesign.com.bt gdsbhutan@gmail.com +975 17631322/77845668 FLAT NO 8,GONGDZIN LAM ABOVE 8/11 CONVENIENT STORE NEXT TO THIMPHU THROMDE BUILDING THIMPHU:BHUTAN
DRAWING TITLE : **DOOR DETAILS**	SCALE : NTS	THRAM NO- -	PLOT NO- LGPT-225	OWNER: STCBL	DESIGN & DRAWN BY JIGME WANGMO Reg# BA-285(P)		

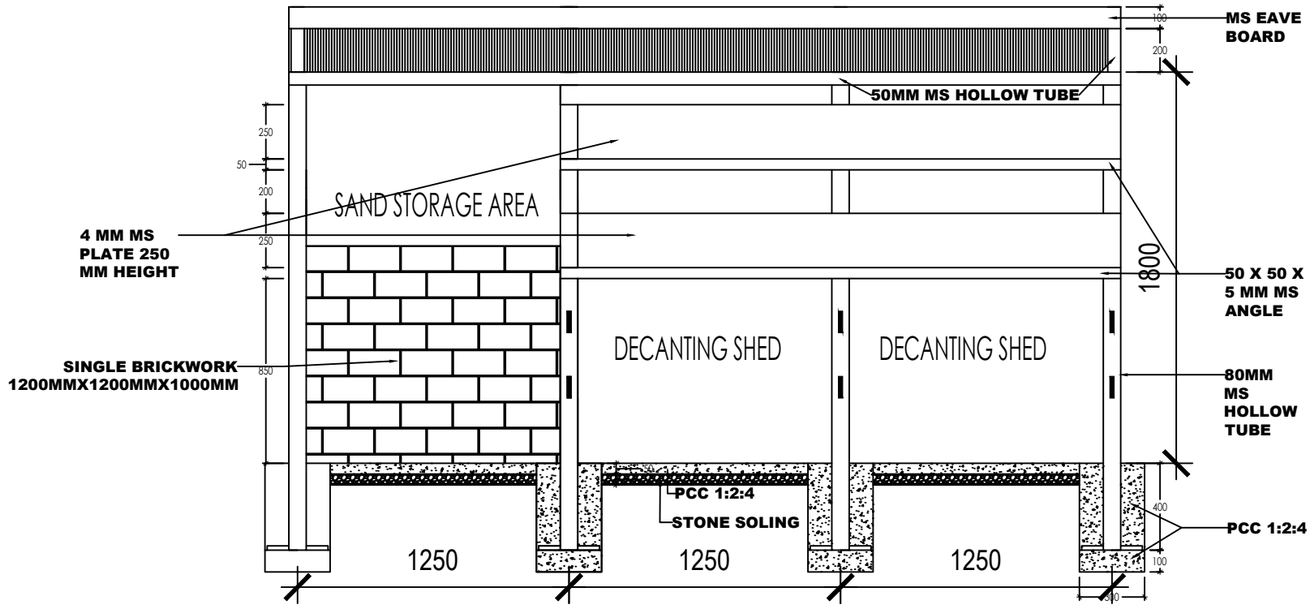

FRONT ELEVATION

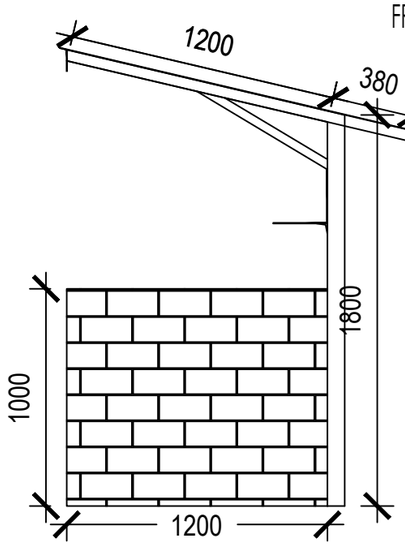

SIDE ELEVATION

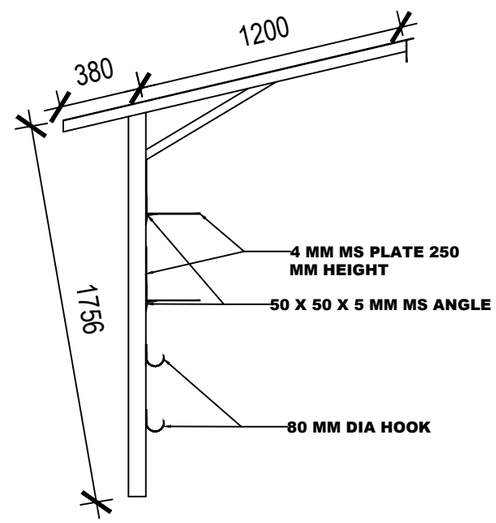

SIDE ELEVATION

DECANTING SHED

PROJECT TITLE : Fuel Retail Outlet		LOCATION : CHAMKUNA LAP, PHUENTSHOLING		DATE: MARCH, 2021	SHEET NO AR- 18	NOTE: ALL DIMENSIONS ARE IN MILLIMETERS UNLESS SPECIFIED OTHERWISE ALL DIMENSIONS MEASURE UNFINISHED SURFACES UNLESS SPECIFIED OTHERWISE ALL DIMENSIONS ARE TO BE READ AND NOT SCALE OFF ANY DISCREPANCY IN DRAWING IS TO BE BROUGHT TO THE IMMEDIATE NOTICE OF THE ARCHITECT AND THE ENGINEER		www.greendesign.com.bt gdsbhutan@gmail.com +975 17631322/77845668 FLAT NO 8,GONGDZIN LAM ABOVE 8/11 CONVENIENT STORE NEXT TO THIMPHU THROMDE BUILDING THIMPHU:BHUTAN
DRAWING TITLE : **DECANTING SHED DETAILS**	SCALE : NTS	THRAM NO- -	PLOT NO- LGPT-225	OWNER: STCBL	DESIGN & DRAWN BY JIGME WANGMO Reg# BA-285(P)		

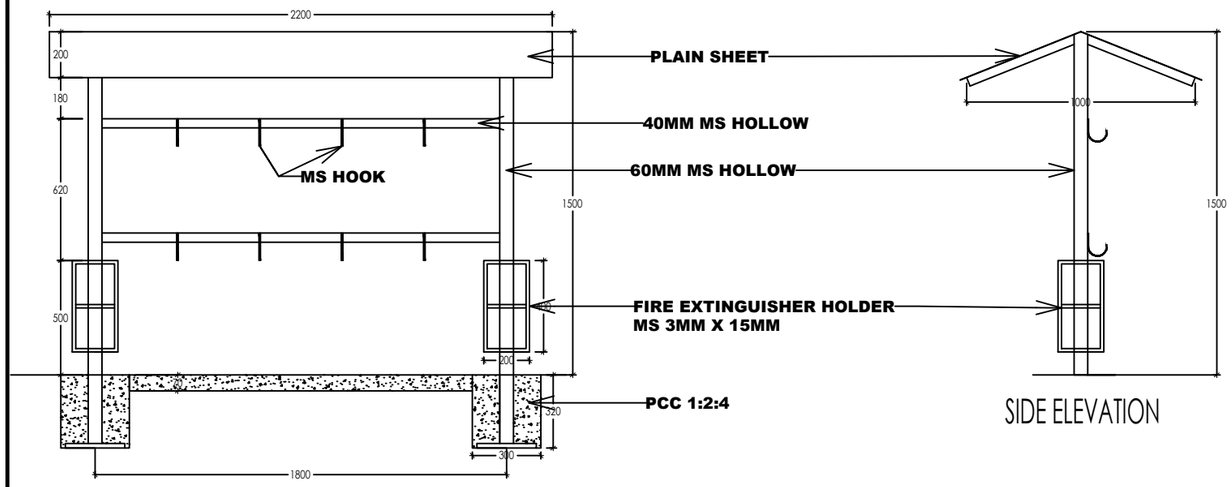

FRONT ELEVATION

SAND BUCKET SHED

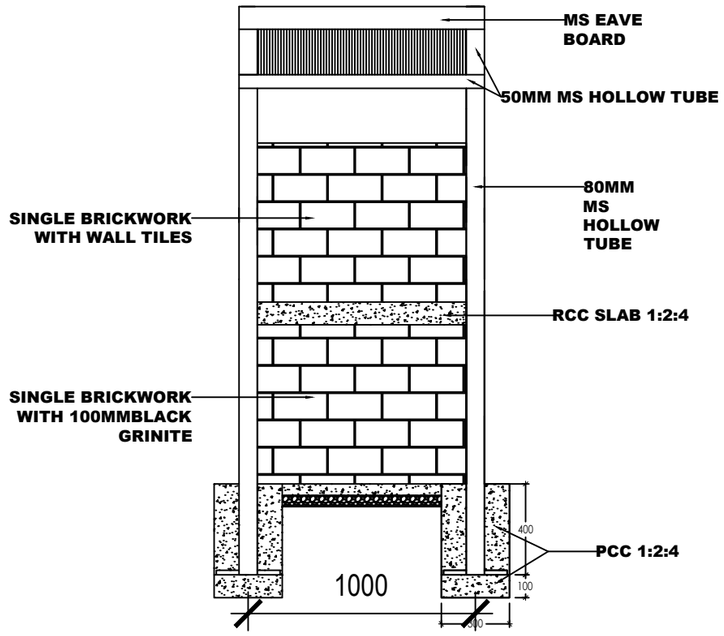

FRONT ELEVATION

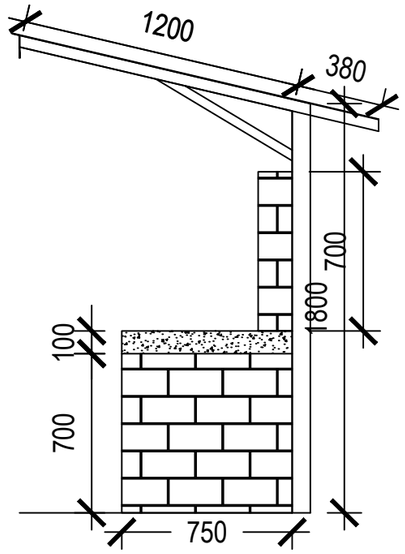

SIDE ELEVATION

WATER FILTER SHED

PROJECT TITLE : Fuel Retail Outlet		LOCATION : CHAMKUNA LAP, PHUENTSHOLING		DATE: MARCH, 2021	SHEET NO AR- 19	**NOTE:** ALL DIMENSIONS ARE IN MILLIMETERS UNLESS SPECIFIED OTHERWISE ALL DIMENSIONS MEASURE UNFINISHED SURFACES UNLESS SPECIFIED OTHERWISE ALL DIMENSIONS ARE TO BE READ AND NOT SCALE OFF ANY DISCREPANCY IN DRAWING IS TO BE BROUGHT TO THE IMMEDIATE NOTICE OF THE ARCHITECT AND THE ENGINEER		www.greendesign.com.bt gdsbhutan@gmail.com +975 17631322/77845668 FLAT NO 8,GONGDZIN LAM ABOVE 8/11 CONVENIENT STORE NEXT TO THIMPHU THROMDE BUILDING THIMPHU:BHUTAN
DRAWING TITLE : **SAND BUCKET & FILTER SHED**	SCALE : NTS	THRAM NO- -	PLOT NO- LGPT-225	OWNER: STCBL	DESIGN & DRAWN BY JIGME WANGMO Reg# BA-285(P)		

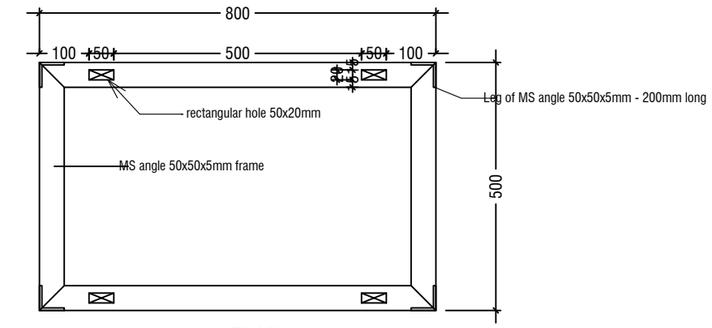

PLAN

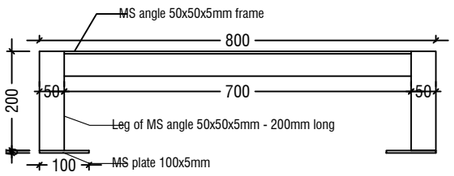

FRONT ELEVATION

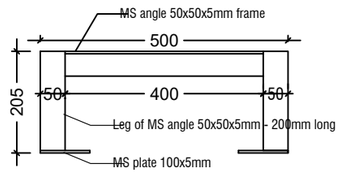

SIDE ELEVATION

MS frame for DU

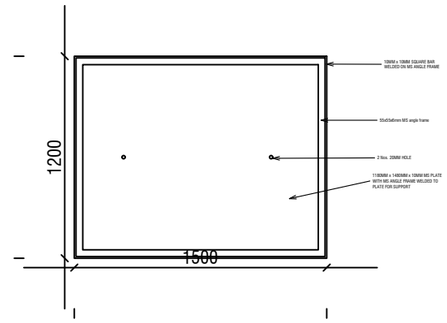

TYPICAL DECANTING CHAMBER

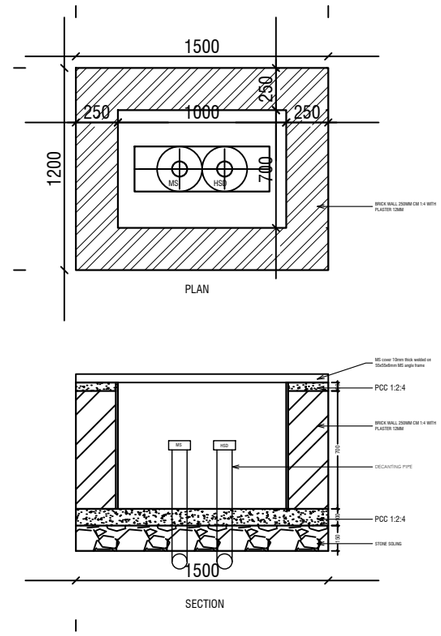

PLAN

SECTION

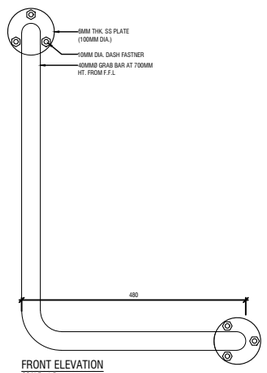

FRONT ELEVATION
SCALE : 1:5

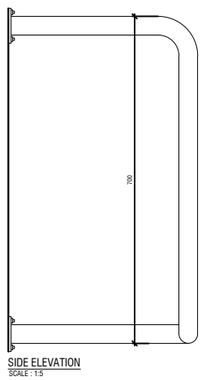

SIDE ELEVATION
SCALE : 1:5

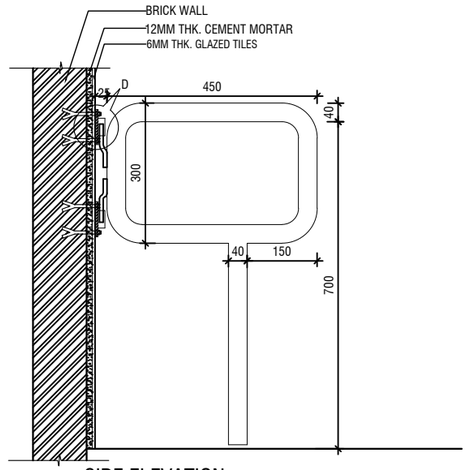

SIDE ELEVATION
SCALE : 1:10

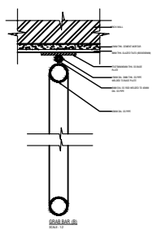

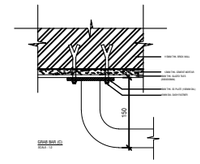

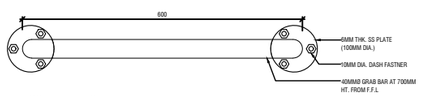

FRONT ELEVATION
SCALE : 1:5

GRAB BAR DETAILS

PROJECT TITLE : Fuel Retail Outlet		LOCATION : CHAMKUNA LAP, PHUENTSHOLING		DATE: MARCH, 2021	SHEET NO AR- 20	**NOTE:** ALL DIMENSIONS ARE IN MILLIMETERS UNLESS SPECIFIED OTHERWISE ALL DIMENSIONS MEASURE UNFINISHED SURFACES UNLESS SPECIFIED OTHERWISE ALL DIMENSIONS ARE TO BE READ AND NOT SCALE OFF ANY DISCREPANCY IN DRAWING IS TO BE BROUGHT TO THE IMMEDIATE NOTICE OF THE ARCHITECT AND THE ENGINEER		www.greendesign.com.bt gdsbhutan@gmail.com +975 17631322/77845668 FLAT NO 8,GONGDZIN LAM ABOVE 8/11 CONVENIENT STORE NEXT TO THIMPHU THROMDE BUILDING THIMPHU:BHUTAN
DRAWING TITLE : **GRAB BAR, DECANTING CHAMBER & MS FRAME FOR DU**	SCALE : NTS	THRAM NO- -	PLOT NO- LGPT-225	OWNER: STCBL	DESIGN & DRAWN BY JIGME WANGMO Reg# BA-285(P)		

Project:

Fuel Retail Outlet

Location:

Dzongkhag: Chukha
(Chamkuna Lap)

Phuentsholing Thromde
PLOT ID: LPGT-225

Owner

State Trading Corporation of Bhutan Ltd

SANITARY DRAWINGS

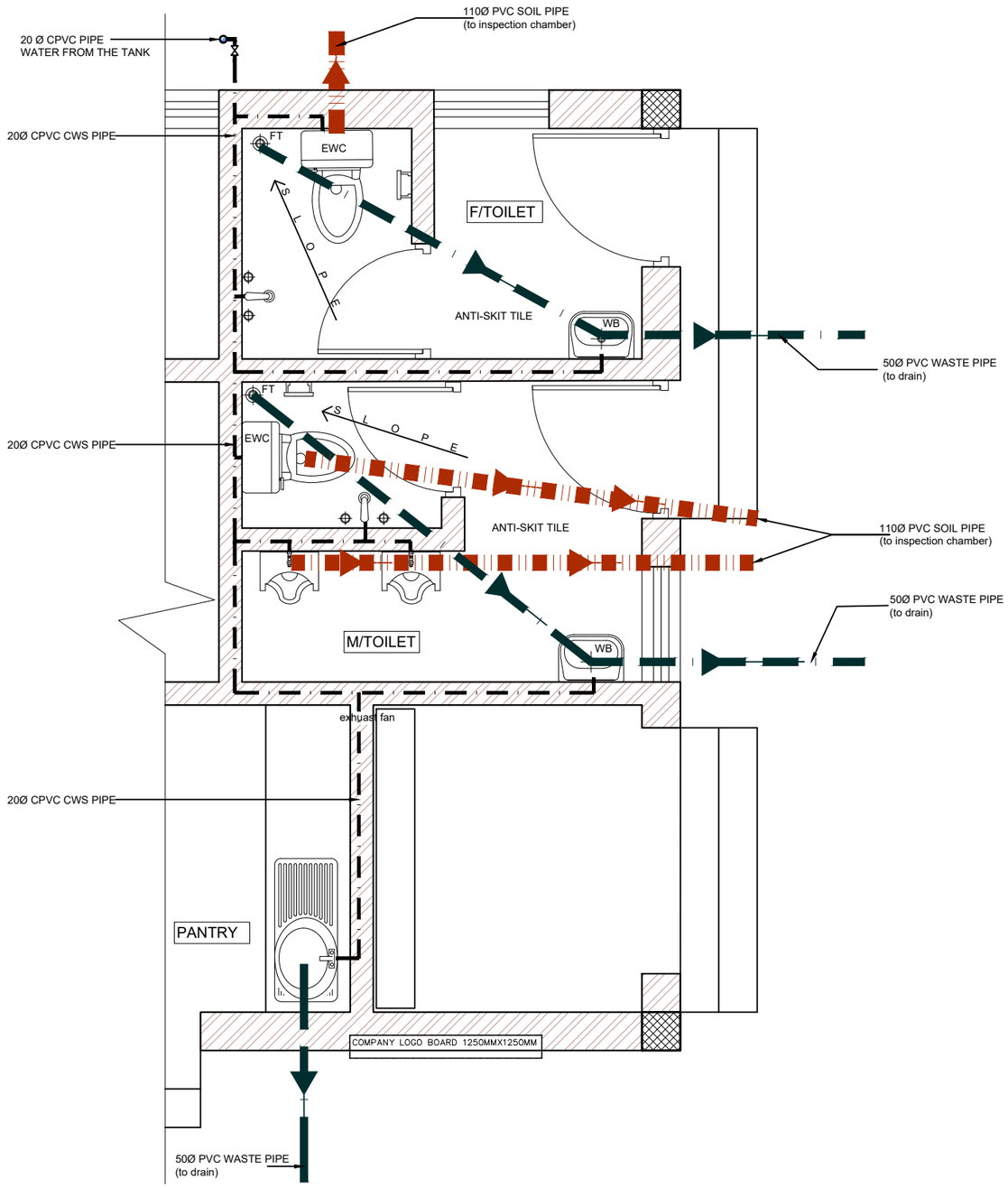

LEGEND:

* CWS = Cold water supply
* CPVC = Chlorinated Polyvinyl Chloride (pipe name)
* PVC = Polyvinyl Chloride pipe
* FT = Floor Trap
* IC = Inspection Chamber
* HDPE = High Density Polyethylene
* EWC = European water closet
* WB = Wash basin
* FT = Floor trap

PROJECT TITLE : Fuel Retail Outlet		LOCATION : CHAMKUNA LAP, PHUENTSHOLING		DATE: MARCH, 2021	SHEET NO S- 02	**NOTE:** ALL DIMENSIONS ARE IN MILLIMETERS UNLESS SPECIFIED OTHERWISE ALL DIMENSIONS MEASURE UNFINISHED SURFACES UNLESS SPECIFIED OTHERWISE ALL DIMENSIONS ARE TO BE READ AND NOT SCALE OFF ANY DISCREPANCY IN DRAWING IS TO BE BROUGHT TO THE IMMEDIATE NOTICE OF THE ARCHITECT AND THE ENGINEER	..\..\Downloads\green-design-logo.png LOGO.png	www.greendesign.com.bt gdsbhutan@gmail.com +975 17631322/77845668 FLAT NO 8,GONGDZIN LAM ABOVE 8/11 CONVENIENT STORE NEXT TO THIMPHU THROMDE BUILDING THIMPHU:BHUTAN
DRAWING TITLE : **TOILET & PANTRY DETAILS**	SCALE : NTS	THRAM NO- -	PLOT NO- LGPT-225	OWNER: STCBL	DESIGN & DRAWN BY JIGME WANGMO Reg# BA-285(P)		

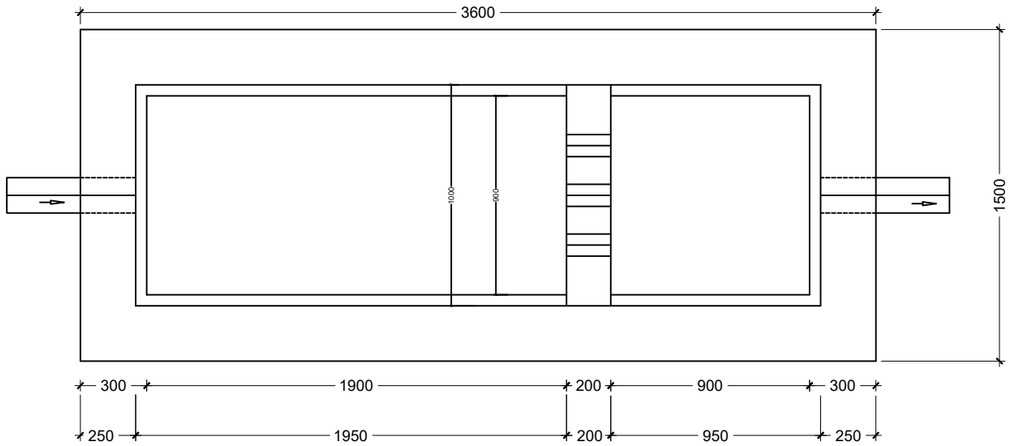

PLAN WITHOUT TOP SLAB

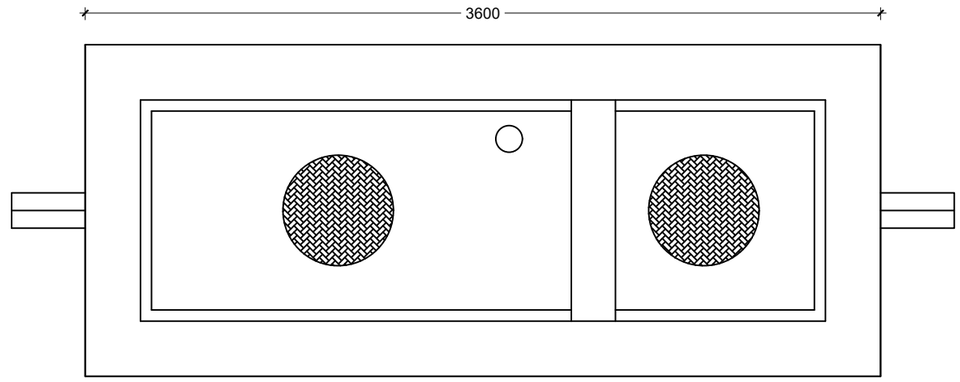

PLAN WITH TOP SLAB

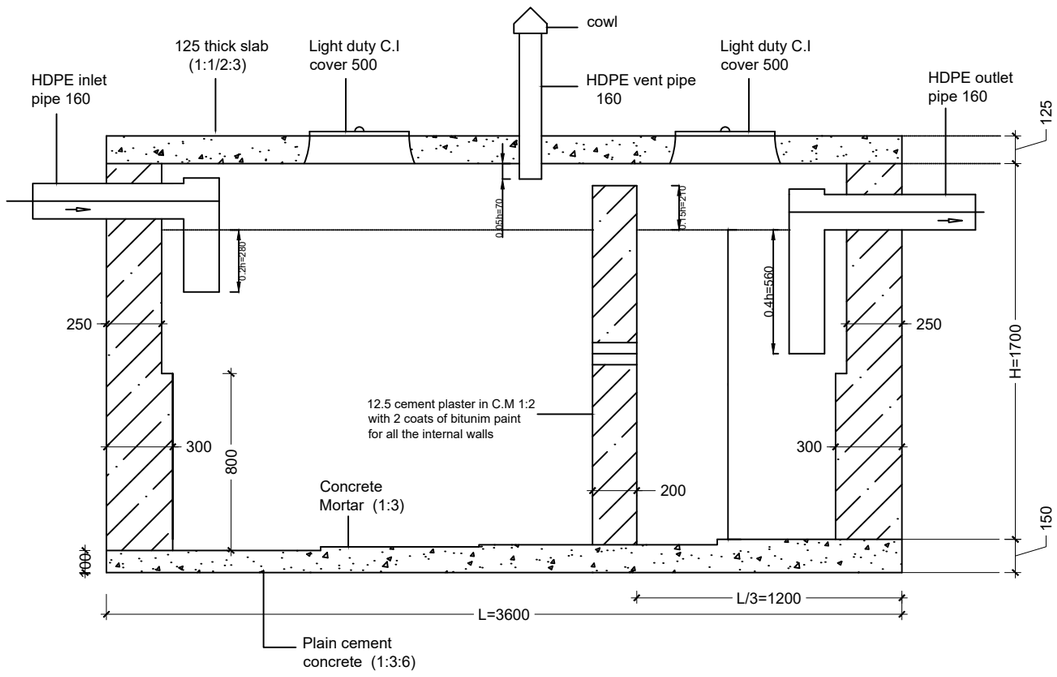

SECTION X-X

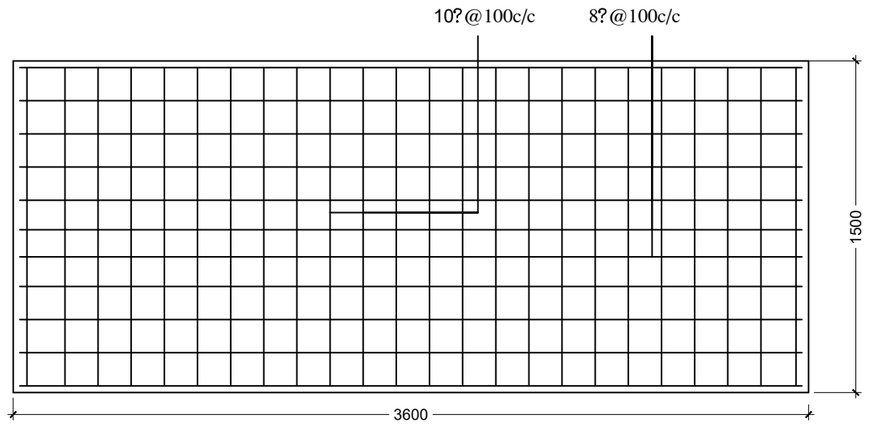

SLAB REINFORCEMENTS IN PLAN

NOTES:
1. All dimensions in mm.
2. Donot measure from the drawings.
3. RCC slab to be M20 grade (2:1/2:3).
4. Steel grade Fe415 to be used.
5. Clear cover to reinf. bars is 15mm for the slab.
6. All internal walls to be plastered with 12.5mm CM 1:2.
7. All internal walls to be coated with three coats of bitunim paints.

PROJECT TITLE : Fuel Retail Outlet		LOCATION : CHAMKUNA LAP, PHUENTSHOLING		DATE: MARCH, 2021	SHEET NO S- 03	NOTE: ALL DIMENSIONS ARE IN MILLIMETERS UNLESS SPECIFIED OTHERWISE ALL DIMENSIONS MEASURE UNFINISHED SURFACES UNLESS SPECIFIED OTHERWISE ALL DIMENSIONS ARE TO BE READ AND NOT SCALE OFF ANY DISCREPANCY IN DRAWING IS TO BE BROUGHT TO THE IMMEDIATE NOTICE OF THE ARCHITECT AND THE ENGINEER	..\..\Downloads\green-design-logo.png	www.greendesign.com.bt gdsbhutan@gmail.com +975 17631322/77845668 FLAT NO 8,GONGDZIN LAM ABOVE 8/11 CONVENIENT STORE NEXT TO THIMPHU THROMDE BUILDING THIMPHU:BHUTAN
DRAWING TITLE : **SEPTIC TANK DETAILS**	SCALE : NTS	THRAM NO- -	PLOT NO- LGPT-225	OWNER: STCBL	DESIGN & DRAWN BY JIGME WANGMO Reg# BA-285(P)		

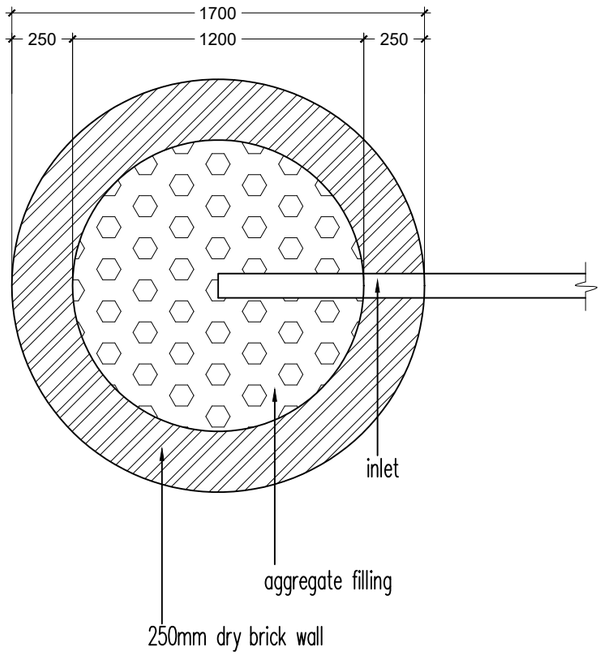

PLAN

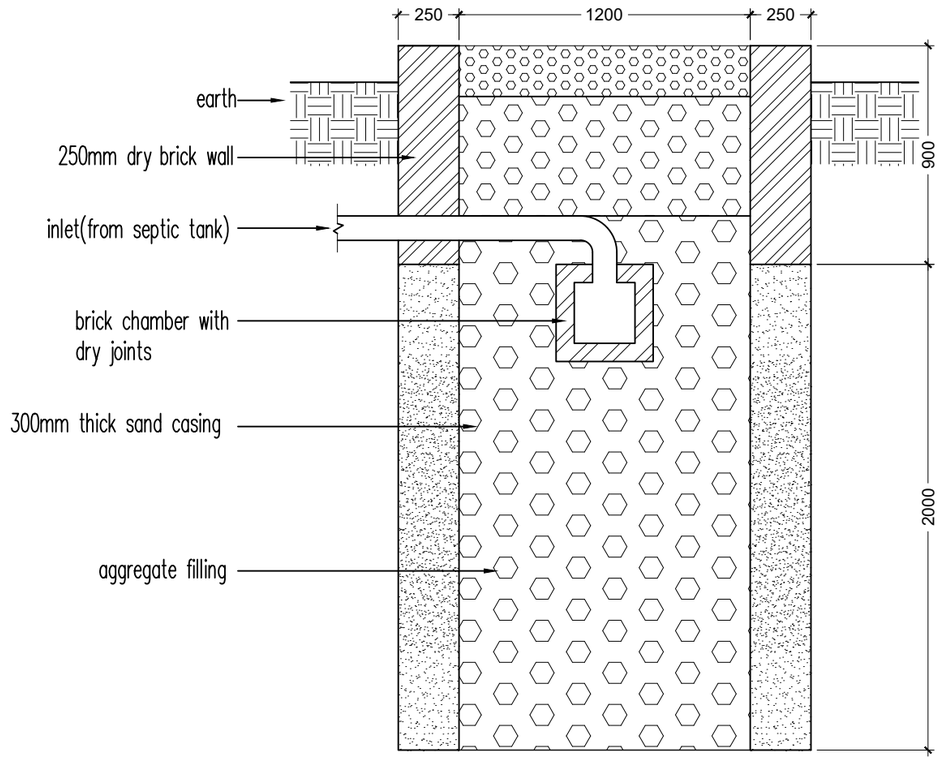

SECTION

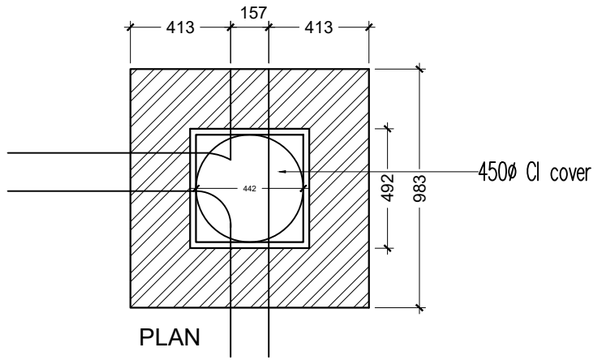

PLAN

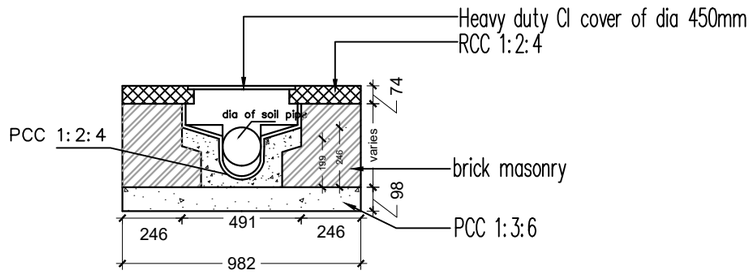

SECTION
Inspection Chamber Details

PROJECT TITLE : Fuel Retail Outlet		LOCATION : CHAMKUNA LAP, PHUENTSHOLING		DATE: MARCH, 2021	SHEET NO S- 04	**NOTE:** ALL DIMENSIONS ARE IN MILLIMETERS UNLESS SPECIFIED OTHERWISE ALL DIMENSIONS MEASURE UNFINISHED SURFACES UNLESS SPECIFIED OTHERWISE ALL DIMENSIONS ARE TO BE READ AND NOT SCALE OFF ANY DISCREPANCY IN DRAWING IS TO BE BROUGHT TO THE IMMEDIATE NOTICE OF THE ARCHITECT AND THE ENGINEER	..\..\..\Downloads\green-design-logo.jpg	www.greendesign.com.bt gdsbhutan@gmail.com +975 17631322/77845668 FLAT NO 8,GONGDZIN LAM ABOVE 8/11 CONVENIENT STORE NEXT TO THIMPHU THROMDE BUILDING THIMPHU:BHUTAN
DRAWING TITLE : **SEPTIC TANK DETAILS**	SCALE : NTS	THRAM NO- -	PLOT NO- LGPT-225	OWNER: STCBL	DESIGN & DRAWN BY JIGME WANGMO Reg# BA-285(P)		